City of Bellingham WASHINGTON

Padden Creek Daylighting

Project Overview: EV-0004

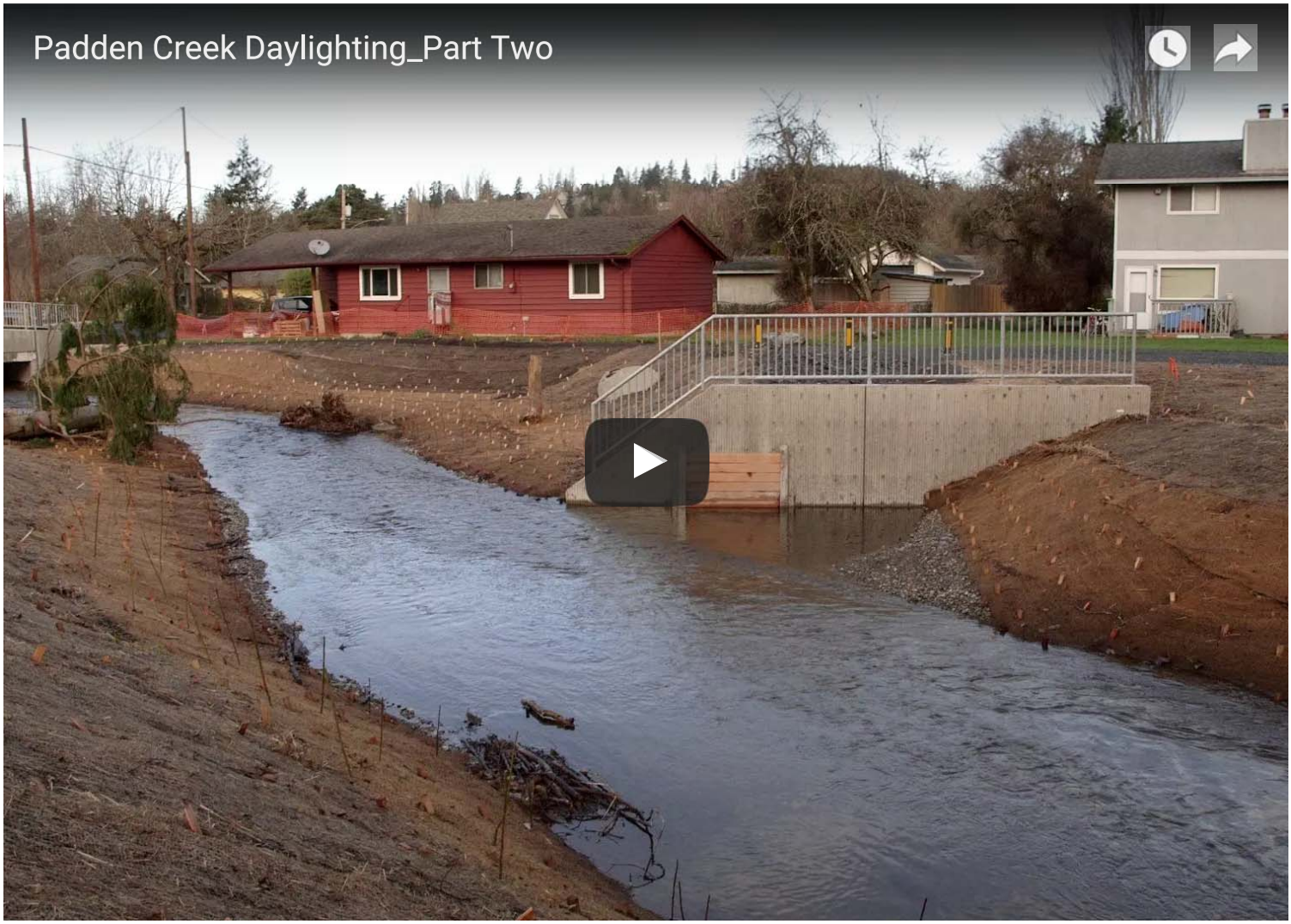

This project involves re-routing 2,300 feet of Padden Creek from the existing brick tunnel into a natural stream channel to allow fish passage, improve habitat and reduce flooding. WSDOT is removing the fish barrier by building a bridge in the vicinity of 20th Street. Watch the short informational preconstruction video to learn more about the purpose and plan for this project.

The first week the project limits will be surveyed and staked, equipment hauled in, and erosion control

placement will begin. The Interurban Trail Rotary parking lot will be closed for the duration of the project, opening again in October 2015. The parking lot will be used as a staging area for construction. The Interurban trail itself will be closed from mid-June to late August to accommodate construction on that segment of the new creek between 16th and 20th streets. Pedestrian traffic will be detoured to Old Fairhaven Parkway.

There are expected to be no road closures on Old Fairhaven Parkway from this project. However, haul trucks are to be expected through the project area and drivers should be alert for additional construction related traffic.

22nd Street between Old Fairhaven Parkway and Happy Court will be closed to thru traffic beginning in July for up to two months to facilitate installation of a culvert for the new creek. Local traffic will have access from the east and north.

JARPA - Padden Creek Daylighting (PDF) August 2013

Open House #2 May 5, 2015

Power Point Presentation (PDF)

Open House #1 June 4, 2013

- Schematic of 90% Design (PDF)
- Presentation of 60% Design (PDF)
- Schematic of 60% Design (PDF)
- Planting Plan (PDF)
- Planting Schedule (PDF)

Project Details

- Status - Complete
- Contract Awarded - 4/20/2015
- Contract Amount - $2,859,478.51
- Contractor - Strider Construction
- Completion Date - 12/20/2015
- Final Contract Amount - $3,107,431.30
- Vicinity Map
- Pre-construction Photo

Construction Photographs

Affected Neighborhoods

- Happy Valley
- South

Participating Departments

- Public Works

contacts

Craig Mueller, P.E.
Project Engineer
Phone: (360) 778-7922
Public Works Contacts

Restoration Programmatic for the State of Washington
Specific Project Information Form

U.S. Army Corps of Engineers, Seattle District, Regulatory Branch

July 29, 2008 version

Use this form to notify the U.S. Army Corps of Engineers, Seattle District (Corps) of a proposed restoration project that falls within the range of the nine restoration activities considered by National Marine Fisheries Service (NMFS) and the U.S. Fish and Wildlife Service (USFWS) during its Section 7 of the Endangered Species Act (ESA) consultation (NMFS Reference No. 2008/03598; USFWS Reference No. 13410-2008-F-0209). You may also use this form if your project slightly deviates from the description and scope of the nine project categories addressed in this consultation. However, should the resulting impacts exceed those considered in the NMFS and USFWS Biological Opinion you will need to consult individually (which generally takes longer) and potentially provide additional information. The Corps is responsible, in most cases, for ensuring that a project complies with the requirements of Section 106 of the National Historic Preservation Act.

Table of Contents

I GENERAL INFORMATION 1
II EFFECT DETERMINATIONS FOR FISH SPECIES USFWS & NMFS 10
III EFFECT DETERMINATIONS FOR LISTED TERRESTRIAL SPECIES 17
IV SIGNATURE 23
APPENDIX A: DEWATERING AND FISH CAPTURE PROTOCOL 24

I GENERAL INFORMATION

A. Date: August 2013 **Corps reference no.**: _____

B. Applicant name (same as in JARPA): Craig Mueller, City of Bellingham

Address 210 Lottie Street

Bellingham, Washington 98225

C. Agent Name (same as on JARPA): Same as applicant

Address: _____

D. Location(s) of activity:

Section: 12 Township: 37N Range: 2E

Latitude (xxx° xx' xx.x"): 48°42'57.28 N

Longitude (xxx° xx' xx.x"): 122°29'29.96" W

UTM: _____

Waterbody: Padden Creek County: Whatcom

ESU or IRU: Puget Sound

E. **Project elements.** In the table below, fill in the maximum length of each project element proposed and the number of structures where applicable. This information will be used by the Services for calculating your take exemption:

Action Category	**Project Length and Width where applicable**	**Number of Structures**
1. Fish Passage:		
a. Culvert Replacement and Relocation	20'Wx4'2"Hx72'L	1 new culvert
b. Retrofitting Culverts		
c. Culvert Removal	30 LF sections of 60-inch diameter concrete pipe at upstream end of tunnel 141 LF of 48" diameter concrete culverts 37' of 36" diameter storm drain	1- 60-inch-diameter pipe. 3-48" diameter concrete culverts 1-36" diameter concrete pipe.
d. Tidegate Removal		
e. Removal or Modification of Sediment Bars or Terraces		
f. Temporary Placement of Sandbags, Hay Bales and Ecology Blocks		
g. Construction of Structures to Provide Passage over Small Dams		
2. Installation of Instream Structures:		
a. Placement of Woody Debris		109 individual logs
b. Placement of Live Stakes		
c. Placement of Engineered Log Jams	25 linear feet	1 structure

Action Category	Project Length and Width where applicable	Number of Structures
d. Grade Control ELJs		
e. Trapping Mobile Wood		
f. Placement of Boulders		
g. Boulder Weirs and Roughened Channels	Approximately 400 linear feet across the channel bottom (about 20 feet wide).	
h. Gravel Placement Associated with Structure Placement		
3. Levee Removal and Modification		
4. Side Channel/Off Channel Habitat Restoration and Reconnection	Creation of a new 2,250-foot-long channel for Padden Creek through within original floodplain. The channel width varies from 12' to 16' wide.	
5. Salmonid Spawning Gravel Restoration		
6. Forage Fish Spawning Gravel Restoration		
7. Hardened Fords and Fencing for Livestock Stream Crossings		
8. Irrigation Screen Installation and Replacement		
9. Debris and Structure Removal	Sidewalk, pavement, and utilities will be removed in several locations where streets are being modified to enable construction of the new channel	

F. Description of the proposed work: [Describe the work to be accomplished including purpose, number and type of structures to be installed or constructed, construction materials and machinery to be used, and anticipated construction techniques to be employed. You may attach additional pages or, if completing this form by computer, expand the space below to provide this information. Attach maps or drawings to clearly illustrate the location, nature, and extent of the proposed work.]

See attached project description and JARPA figures.

G. Project timing:

Start date – June 1, 2014	
End date – October 31, 2014	

H. Anticipated cubic feet per second (CFS) of stream at time of construction:

Based on a work window of July to February, the CFS could range widely. In January 2012, Padden Creek had a discharge of nearly 180 CFS during a storm event. During the low water season in the summer months, construction activities are anticipated to be conducted during flows of less than 1 CFS (SAIC 2012).

I. How much area do you propose to clear for temporary aceess?

The temporary construction access will occur primarily from existing roadways, trails, and other developed areas. There will be clearing required to construct the new channel as described in the JARPA project description, but only a very limited area is proposed to be cleared specifically for temporary access. Construction will be sequenced such that the cleared area established for the creation of the new creek channel can also be used to provide temporary access for construction.

J. How many trees and what sizes will be felled for temporary access?

No trees are proposed to be removed for temporary access. Numerous trees will need to be cleared out to construct the restored channel for Padden Creek.

K. Will your temporary access traverse across slopes steeper than 30%?

Not applicable.

L. How many temporary stream crossings do you propose? List all best management practices (BMPs) proposed to avoid and minimize impacts from stream erossings.

No temporary stream crossings are proposed.

M. Culvert replacements:

1. Append the applicable "Summary Form for Fish-Passage Design Data" that can be found in the WDFW Culvert Manual ((Bates et al. 2003) Appendix F).
2. Append maintenance plan that shows that culvert will be in design condition prior to each fish passage season.
3. If your project is in gradients 6 – 10 % and a bridge is not feasible, use stream simulation option and provide annual monitoring data of substrate, invert elevation, and channel form (elements of roughened channel: boulders, pools, low flow channel) including a picture prior to each migration season.

4. If your culvert is longer than 150 feet include tribal comments. If you discussed your design with WDFW, include WDFW comments or a record of your conversation with WDFW.
5. Are you increasing the amount of rip-rap. If so, by how much?
6. Describe how proper ecological functions (bedload movement, debris movement, flood flows) in addition to fish passage will be met.
7. If you are increasing the length or width of a road:
   a. Quantify the increased impervious surface created as a result of this activity.
   b. List measures that you propose to use to avoid impacts to resources and water quality.

   Note: Permanent road improvements that result in increased traffic or development are not permitted under this PBA.

N. Rock grade control strnctnres: How much combined rock is proposed for structures?

Approximately 1100 cubic yards of a streambed sediment, cobble and boulders mix are proposed to be placed to construct roughened channels that support grade breaks in the new channel alignment.

O. Removal or modification of sediment bars or terraces: Has there been previous removal of sediment at this location? If yes when and how much?

The project area includes floodplain that was likely historically occupied by Padden Creek, Tributary 1, and Tributary 2, and several wetlands. The area has been highly modified from its natural and historic condition, resulting in the creek alignment flowing through a man-made tunnel. The old channel was subject to fill and re-development into residential areas, including yards and roads.

P. Side Channel/Off Channel Habitat Creation:

The attached design report contains information related to the design of the new channel, which included field investigations, hydrologic and hydraulic analyses, as well as numerous other studies and evaluations of the proposed design features. The location of the channel is within the historic floodplain, which is more likely to support establishment of a long-term, self-sustaining channel. The proposed project will take approximately one construction season to implement.

1. Has a reach assessment or analysis been conducted for this project?
2 How many years will the project take to complete?
3. Demonstrate sufficient hydrology for a self-sustaining channel.

Q. Will you be isolating the work area? [Explain how your decision on working in the wet or dry, or partially isolation the area, will minimize impacts to salmonids.]

To minimize impacts to salmonids, the new channel construction will occur prior to re-routing the creek. Fish block nets will be used to hand-net fish from the work area around the tunnel entrance after channel construction has been completed. Once the fish are removed, a temporary bypass will be created and activated to allow completion of the construction of the upper portion of the channel and removal of the upper portion of the tunnel.

R. Give a maximum estimate for the duration and length of downstream turbidity impacts. The Services will use this estimate for giving you your take exemption. (During construction you will be monitoring downstream sedimentation every 20 min to verify/refine your given estimate.)

Downstream turbidity impacts are expected to be very minimal and short term. They are likely to occur only once the temporary bypass is activated and water enters the new channel for the first time. It is anticipated that some turbidity will dissipate approximately 150 feet downstream from the point where the newly daylighted channel connects to the existing channel of Padden Creek. BMPs and temporary erosion and sediment control (TESC) measures will be employed, as necessary, to minimize the impact of turbidity in the waterway. These BMPs and TESC measures are listed in the attached JARPA project description.

S. Explain what equipment will generate noise above ambient levels and for what period during the day and for how many days.

The proposed work will involve use of typical construction equipment such as excavators, backhoes, and dump trucks. The proposed project area is within an industrial area and active shipping berth. The noise generated by construction equipment is similar to the equipment that would be in use at an active shipping berth and will not generate noise significantly above ambient levels.

T. Please attach HPA or explain why you do not need one.

An HPA application is being reviewed concurrently by WDFW. The HPA is anticipated to be obtained in October 2013.

U. If your project does not meet all of the criteria outlined in the PBA, but is a restoration action of similar scope and impacts, contact the Services with the project's description, conservation measures and reason(s) it may not currently fit under the PBA. Provide below any supporting conversations with NMFS and/or USFWS staff, including a list of the PBA criteria your project won't meet.

This is a living document. We are continuously working on refining the proposed/covered actions and conservation measures.

The current tunnel contributes to degradation of the creek's water quality through elimination of natural riparian buffers, reducing the creek's interconnection to interflow and groundwater, natural morphology, and biological integrity. This project provides improved passage for all life stages of salmonids to access historical habitats from which they have been excluded by a

nonfunctioning drainage structures (in this case, the man-made conveyance tunnel). This project is consistent with several of the Action Categories outlined in the 2008 restoration PBA. These Action Categories are:

- Action Category 1(a): The proposed daylighting of Padden Creek involves abandonment of a man-made tunnel and creation of a new channel in the vicinity of the historic channel. The project requires construction of a culvert as in Action Category 1(a). The proposed project is consistent with the description of the Action Category provided in the 2008 PBA and will incorporate all the applicable conservation measures identified for this Action Category.
- Action Category 1 (c): The proposed abandonment of the man-made tunnel is consistent with Action category 1(c) and the proposed construction timeline for removing this tunnel is consistent with the conservation measure for this Action Category.
- The proposed project does not include any excluded activities identified under Action Category 1.

- Action Category 2 (a): The proposed project includes placement of LWD in the newly created channel. The backwater logs are proposed to be placed to support development of backwater conditions to enhance and support the creation of the new wetland areas. The toe logs are placed in order to stabilize the banks in the new channel. The revetment logs are proposed to be placed to help maintain the new pool habitats. The LWD placement design is consistent with the Action Category description, and will incorporate the conservation measures identified.
  - Action Category 2 (c): The proposed project includes placement of one ELJ. The ELJ will promote habitat creation and bank stabilization, and is therefore consistent with the Action Category description, and will incorporate the conservation measures.

  - Action Category 2(g): The proposed project includes placement of boulder cascades designed to improve fish passage through a section of short and steep sections of the new creek channel in order to control the channel gradient and dissipate energy. The boulders will provide a diverse range of water depths and velocities needed for fish passage and is consistent with the description of boulder weirs in Action Category 2(g). The project is will incorporate the applicable conservation measures of this action category. The boulder cascades are not constructed as upstream pointing V or U configurations as in conservation measure 2, but are designed to allow and facilitate passage for all life forms of native fish species.
  - No excluded activities under Action Category 2 are included.
  - Action category 4: This project is consistent with the description of activities for Action Category 4, although the project is not proposing side channel or off-channel habitat. The project proposes to daylight 2,130 feet of Padden Creek to create a new channel for Padden Creek within its historical floodplain. This new channel is anticipated to create a self-sustaining channel maintained through natural processes. This portion of the project will comply with the conservation measures for this Action Category.
  - Action Category 9: This project is consistent with the description of activities for Action Category 9, because it involves the removal of man-made structures from freshwater habitats, although it removes structures (pavement, sidewalks, and utilities) not listed in the Action Category. The material will be removed using land-based equipment and

taken to an upland disposal site, consistent with the Action Category requirements. The conservation measures identified for this category are not generally applicable to this project, but the project will comply with the intent to protect the area from toxic materials and revegetation of banks and shorelines.

- This project will comply with all of the General Conservation Measures provided in the 2008 PBA, and does not include any of the overall excluded restoration actions.

II EFFECT DETERMINATIONS FOR FISH SPECIES USFWS & NMFS

Each project should have the appropriate effect determination. The PBA allows for No Effect (NE), Not Likely to Adversely Affect (NLAA), or Likely to Adversely Affect (LAA) determinations for listed species. Each determination must be adequately documented in this form. If you need assistance in determining the appropriate effect determination, consult the Corps, USFWS, and NMFS staff.

Check all currently listed evolutionarily significant units (ESUs) or Interim Recovery Units (IRUs) that may occur in the fifth field watershed where the project is located.

Endangered

___ Upper Columbia River Spring-run Chinook (*Oncorhynchus tshawytscha*)
___ Snake River Sockeye (*Oncorhynchus nerka*)
___ Upper Columbia River Steelhead (*Oncorhynchus mykiss*)

Threatened

_x_ Bull trout, Coastal/Puget Sound IRU *(Salvelinus confluentus)*
___ Bull trout, Columbia River IRU (*Salvelinus confluentus*)
___ Coho salmon, Lower Columbia River ESU (*O. kisutch*)
___ Chinook salmon, Lower Columbia River ESU (*Oncorhynchus tshawytscha*)
_x_ Chinook salmon, Puget Sound ESU (*Oncorhynchus tshawytscha*)
___ Chinook salmon, Snake River Spring/Summer-run ESU (*Oncorhynchus tshawytscha*)
___ Chinook salmon, Snake River Fall-run ESU (*Oncorhynchus tshawytscha*)
___ Chum salmon, Columbia River ESU (*Oncorhynchus keta*)
___ Chum salmon, Hood Canal summer ESU (*Oncorhynchus keta*)
___ Steelhead trout, Lower Columbia River ESU (*Oncorhynchus mykiss*)
___ Steelhead trout, Middle Columbia River ESU (*Oncorhynchus mykiss*)
_x_ Steelhead trout, Coastal/Puget Sound DPS (*Oncorhynchus mykiss*)
___ Steelhead trout, Snake River ESU (*Oncorhynchus mykiss*)

Designated

PROPOSED Critical Habitat for Steelhead trout, Coastal/Puget Sound DPS (Oncorhynchus mykiss) includes Padden Creek

_x_ Critical habitat for Coastal/Puget Sound bull trout IRU
___ Critical habitat for Columbia River bull trout IRU
___ Critical habitat for Columbia River chum salmon ESU
___ Critical habitat for Hood Canal summer chum salmon ESU
___ Critical habitat for Lower Columbia River Chinook salmon ESU
___ Critical habitat for Upper Columbia River Spring-run Chinook salmon ESU
___ Critical habitat for Snake River Spring/Summer-run Chinook salmon ESU
___ Critical habitat for Snake River Fall-run Chinook salmon ESU
___ Critical habitat for Puget Sound Chinook salmon ESU
___ Critical habitat for Lower Columbia River steelhead trout ESU
___ Critical habitat for Upper Columbia River steelhead trout ESU

___ Critical habitat for Middle Columbia River steelhead trout ESU
___ Critical habitat for Snake River steelhead trout ESU

Lake Ozette Sockeye salmon are not covered by this programmatic at this time.

Directions: Use the Notes section under each question to document your rational and decision making process for presence or absence of the fish, and the effect determination.

FILL OUT THIS SECTION FOR EACH INDIVIDUAL ESU THAT OCCURS IN THE FIFTH FIELD WATERSHED

Effect Determination by Species: No Effect
ESU and critical habitat: Coastal/Puget Sound IRU Bull trout *(Salvelinus confluentus)*

1) Is the project in a fifth - field watershed that contains or has the potential to contain Coastal/Puget Sound IRU Bull Trout?

YES _X_ If yes, list fifth field watershed, and go to question 2.
Fifth-field watershed: 1711000201

NO ___ If no, the project will have "No Effect" on (insert species). Go to question 5. Notes:

_____

_____

2) Do the stream(s) in which impacts may occur contain suitable habitat for Coastal/Puget Sound IRU Bull trout?

For bull trout use Tables 1 & 2 of Appendix A and/or the draft recovery plans (available at: http://www.fws.gov/pacific/bulltrout/recovery.html) and a distribution map the USFWS posted at http://www.fws.gov/westwafwo/index.html to determine if your project is within critical habitat for bull trout.
For other salmon you may use the NMFS critical habitat web page at http://www.nwr.noaa.gov/Salmon-Habitat/Critical-Habitat/CH-Maps.cfm determine if your project is within critical habitat.

YES ___ If yes, what type of habitat is present? Spawning ___ Rearing ___ Migratory Corridor ___ Not known ___ Go to Question 3.

NO _X_ If no, the project will have "No Effect" on Coastal/Puget Sound IRU Bull trout. Go to question 5.

Notes: Padden Creek has been identified in City of Bellingham planning documents as having potential habitat for Bull Trout (COB 2011); however, Padden Creek is not included in the final designated critical habitat for Coastal/Puget Sound IRU Bull trout (DOI 2010).

_____

3) Approximately how far is the project from the nearest suitable habitat (in river miles, upstream or downstream) for (insert species)?
(insert answer here)
Go to question 4.

Notes: _____

4) Does the proposed activity have the potential to alter or affect the following indicators: temperature, sediment, chemical contamination/nutrients, physical barriers, substrate embeddedness, large woody debris, pool frequency, pool quality, off-channel habitat, refugia, wetted width/depth ratio, streambank condition, floodplain connectivity, peak/base flows, drainage network, disturbance history, function of riparian reserves, or disturbance regime?

YES ____ If yes, briefly explain which habitat elements will be affected and indicate if the effects will be short term or long-term. For example, many activities will have increased levels of turbidity during project implementation, but are expected to result in long-term improvements to the target indicators. _____

NO ____ If no, the project will have "No Effect" on (insert species). Go to question 4.

Notes: _____

5) Provide rationale for effect determination.

Bull trout may occur in nearshore areas of Bellingham Bay, and may enter the mouth of Padden Creek, but they are not likely to migrate, rear, or spawn upstream in the reach of the creek where the proposed action would occur. The project would have no effect on bull trout because they are unlikely to be within the proposed project area or area of potential effects.

Effect Determination: No effect Coastal/Puget Sound Bull trout

Note: If you are dewatering an area, electroshocking in an area, or are doing major in-water work where listed salmonids are likely to be present during the work window, you will probably have a LAA effect determination.

Effect Determination by Species: May Affect, Not Likely to Adversely Affect
ESU and critical habitat: _Puget Sound ESU Chinook salmon (*Oncorhynchus tshawytscha*)

1) Is the project in a fifth - field watershed that contains or has the potential to contain Puget Sound ESU Chinook salmon?

YES __X__ If yes, list fifth field watershed, and go to question 2.
Fifth-field watershed: 1711000201

NO ___ If no, the project will have "No Effect" on (insert species). Go to question 5. Notes:

2) Do the stream(s) in which impacts may occur contain suitable habitat for Puget Sound ESU Chinook salmon?

For bull trout use Tables 1 & 2 of Appendix A and/or the draft recovery plans (available at: http://www.fws.gov/pacific/bulltrout/recovery.html) and a distribution map the USFWS posted at http://www.fws.gov/westwafwo/index.html to determine if your project is within critical habitat for bull trout.
For other salmon you may use the NMFS critical habitat web page at http://www.nwr.noaa.gov/Salmon-Habitat/Critical-Habitat/CH-Maps.cfm determine if your project is within critical habitat.

YES __X__ If yes, what type of habitat is present? Spawning ___ Rearing __X__
Migratory Corridor __X__ Not known ___ Go to Question 3.

NO ___ If no, the project will have "No Effect" on (insert species). Go to question 5.

Notes: Padden Creek is not included in Puget Sound ESU Chinook critical habitat.

3) Approximately how far is the project from the nearest suitable habitat (in river miles, upstream or downstream) for Puget Sound ESU Chinook salmon?

Padden Creek, Padden Creek estuary lagoon, and Bellingham Bay are considered suitable habitat for Chinook salmon for rearing and migration, as these areas support other species of anadromous fish (COB 2011). The reach of the creek proposed to be daylighted does not contain suitable habitat and prevents access to upstream potentially suitable habitat.

Go to question 4.

Notes:

4) Does the proposed activity have the potential to alter or affect the following indicators: temperature, sediment, chemical contamination/nutrients, physical barriers, substrate embeddedness, large woody debris, pool frequency, pool quality, off-channel habitat, refugia, wetted width/depth ratio, streambank condition, floodplain connectivity, peak/base flows, drainage network, disturbance history, function of riparian reserves, or disturbance regime?

YES __X__ If yes, briefly explain which habitat elements will be affected and indicate if the effects will be short term or long-term. For example, many activities will have increased levels of turbidity during project implementation, but are expected to result in long-term improvements to the target indicators.

The proposed project will result in long-term improvements to several target indicators such as sediment and water quality (including temperature), connectivity, refugia, streambank condition, habitat complexity, and riparian function. The proposed project will remove a fish barrier and create a new creek channel, which will improve streambank condition and sediment quality. Fill will be removed, converting upland areas into aquatic areas, which will increase floodplain connectivity and refugia.

The project may create situations that result in short-term water quality impacts upon completion of the new channel and diversion of Padden Creek into the new channel reach. The most likely potential impact would be temporarily elevated turbidity levels upon project completion. This potential project effect would be anticipated to be short term and localized in nature to the area within the new channel, and approximately 150 feet beyond the convergence with the current channel at the downstream end. Construction activities related to the new channel will occur in the dry to minimize impacts of fish handling.

NO ____ If no, the project will have "No Effect" on Puget Sound ESU Chinook salmon. Go to question 4.

Notes: _____

5) Provide rationale for effect determination

The project is intended to provide long-term fish passage benefits to Chinook salmon. Potential effects include water quality impairments, particularly increases in turbidity. Potential water quality impacts are expected to be insignificant and not expected to be at a level that would affect salmonids. Fish handling requirements are anticipated to be minimal and completed according to WSDOT fish handling protocols in a manner that greatly reduces the likelihood effects (WSDOT 2012).

Effect Determination: NLAA Puget Sound ESU Chinook salmon

Effect Determination by Species: May Affect, Not Likely to Adversely Affect
ESU and critical habitat: Puget Sound DPS Steelhead (*Oncorhynchus mykiss*)

1) Is the project in a fifth - field watershed that contains or has the potential to contain Puget Sound DPS Steelhead?

YES __X__ If yes, list fifth field watershed, and go to question 2.
Fifth-field watershed: 1711000201

NO ___ If no, the project will have "No Effect" on (insert species). Go to question 5. Notes:

2) Do the stream(s) in which impacts may occur contain suitable habitat for Puget Sound DPS Steelhead?

For bull trout use Tables 1 & 2 of Appendix A and/or the draft recovery plans (available at: http://www.fws.gov/pacific/bulltrout/recovery.html) and a distribution map the USFWS posted at http://www.fws.gov/westwafwo/index.html to determine if your project is within critical habitat for bull trout.
For other salmon you may use the NMFS critical habitat web page at http://www.nwr.noaa.gov/Salmon-Habitat/Critical-Habitat/CH-Maps.cfm determine if your project is within critical habitat.

YES __X__ If yes, what type of habitat is present? Spawning ___ Rearing __X__
Migratory Corridor __X__ Not known ___ Go to Question 3.

NO ___ If no, the project will have "No Effect" on (insert species). Go to question 5.

Notes: Padden Creek has been included in proposed critical habitat for Puget Sound DPS Steelhead (NOAA 2013).

3) Approximately how far is the project from the nearest suitable habitat (in river miles, upstream or downstream) for Puget Sound DPS Steelhead?

Padden Creek, Padden Creek estuary lagoon, and Bellingham Bay are considered suitable habitat for steelhead for rearing and migration. The reach of the creek proposed to be daylighted does not contain suitable habitat and prevents access to upstream potentially suitable habitat.

Go to question 4.

Notes: _____

4) Does the proposed activity have the potential to alter or affect the following indicators: temperature, sediment, chemical contamination/nutrients, physical barriers, substrate embeddedness, large woody debris, pool frequency, pool quality, off-channel habitat, refugia, wetted width/depth ratio, streambank condition, floodplain connectivity, peak/base flows, drainage network, disturbance history, function of riparian reserves, or disturbance regime?

YES __X__ If yes, briefly explain which habitat elements will be affected and indicate if the effects will be short term or long-term. For example, many activities will have increased levels of turbidity during project implementation, but are expected to result in long-term improvements to the target indicators.

The proposed project will result in long-term improvements to several target indicators such as sediment and water quality (including temperature), connectivity, refugia, streambank condition, habitat complexity, and riparian function. The proposed project will remove a fish barrier and create a new creek channel, which will improve habitat access, streambank condition, and sediment quality. Fill will be removed, converting upland areas into aquatic areas, which will increase floodplain connectivity and refugia.

The project may create situations that result in short-term water quality impacts upon completion of the new channel and diversion of Padden Creek into the new channel reach. The most likely potential impact would be temporarily elevated turbidity levels upon project completion. This potential project effect would be anticipated to be short-term and localized in nature to the area within the new channel, and approximately 150 feet beyond the convergence with the current channel at the downstream end. Construction activities related to the new channel will occur in the dry to minimize impacts of fish handling.

NO ___ If no, the project will have "No Effect" on Puget Sound DPS Steelhead. Go to question 4.

Notes: _____

5) Provide rationale for effect determination

The project is intended to provide long-term fish passage benefits to Chinook salmon. Potential effects include water quality impairments, particularly increases in turbidity. Potential water quality impacts are expected to be insignificant and not expected to be at a level that would affect salmonids. Fish handling requirements are anticipated to be minimal and completed according to WSDOT fish handling protocols in a manner that greatly reduces the likelihood effects (WSDOT 2012).

Effect Determination: NLAA Puget Sound DPS Steelhead

III EFFECT DETERMINATIONS FOR LISTED TERRESTRIAL SPECIES

1. To determine which listed species may occur in the project area follow the steps below:
   a. Obtain a county species list from the USFWS web page.
   http://www.fws.gov/westwafwo/se/SE_List/endangered_Species.asp
   http://www.fws.gov/easternwashington/county%20species%20lists.htm
   b. Site-specific information of listed species occurrences in Washington State may be obtained from the Washington Department of Fish and Wildlife Priority Habitat and Species Program http://www.wdfw.wa.gov/hab/phspage.htm and from the Washington Department of Natural Resources Natural Heritage Program at http://www.dnr.wa.gov/nhp/.
   c. Remove species from the species list when habitat is not available for the species in the project area or "vicinity of activity" (generally 1 mile radius around the project site. The area that may be affected by any project impacts including noise and turbidity.)

2. When filling out the information below consider:
   Each project should have the appropriate effect determination. The PBA allows for NE or NLTAA determinations for terrestrial species, and NE, NLTAA or LTAA for aquatic species. Each determination must be adequately documented in this form. If you need assistance in determining the appropriate effect determination, request help from a Corps ESA Coordinator or the USFWS. The USFWS contact is Tom McDowell at 360-753-9426.

   a. For information on species biology, range and critical habitat use the USFWS web site: http://www.fws.gov/westwafwo/index.html
   b. Conservation Measures are listed in Appendix B
   c. If you do not implement all conservation measures related to the species present please explain.

LISTED TERRESTRIAL SPECIES

Please refer to the PBA for actions that may affect these species and conservation measures to protect terrestrial species. For information on the listed terrestrial and aquatic species that occur in Washington, visit the following website: ecos.fws.gov or contact the following FWS field offices:

Western Washington Office in Lacey:	(360) 753-6044	John Grettenberger
Central Washington Office in Wenatchee:	(509) 665-3508	Jessica Gonzales
Eastern Washington office in Spokane:	(509) 891-6839	Suzanne Audet

COASTAL ECOSYSTEMS

Listed Species: Brown Pelican (*Pelecanus occidentalis*), **Oregon silverspot butterfly** (*Speyeria zerene hippolyta*), **and Snowy Plover** (*Charadrius alexandrinus nivosus*): **No Effect**

a) Will the activity occur in Grays Harbor, Wahkiakum, Pacific, Jefferson or Clallam Counties?
No X Put NE under "Effect Determination" for these three coastal species.
Yes If yes go to b)

b) Will the activity alter sand islands or coastal dunes and meadows in Grays Harbor or Pacific County?
No X Yes
If yes, contact the FWS office in Lacey for coordination.

c) Conservation Measures to be applied:

d) Effect Determination for coastal species and rationale:

No effect. The proposed project will not occur in the named counties providing habitat for these species.

LOWER COLUMBIA

Listed species: Columbian white-tailed deer (*Odocoileus virginianus leucurus*)

a) Will the activity occur on islands or in the floodplain of the lower Columbia River (Wahkiakum and Cowlitz Counties) and include installing fence?
No X Yes
If yes, apply conservation measures for the Columbian white-tailed deer

b) Effect Determination and rationale:

No effect. The proposed project will not occur in the named counties providing Columbian white-tailed deer habitat.

CARNIVORES and CARIBOU

1. Gray Wolf (*Canis lupus*) – The range of the grey wolf includes the Blue Mountains, northeast Washington (Rocky Mountains) and the Cascade Mountains. There are no confirmed records of wolves west of the Cascade Crest and no documented den sites in the state.

2. Grizzly Bear (*Ursus arctus horribillis*) – The grizzly bear recovery plan identifies high alpine areas in the North Cascades (north of Interstate 90 to the Canadian border) as important for recovery of this species in Washington.

3. Canada lynx (*Lynx Canadensis*) - This species occurs in high elevation forests (generally above 4,000 feet) in the North Cascades and northeast Washington.

4. The **woodland caribou** (*Rangifer tarandus caribou*) occurs in high elevation forests (generally above 4,000 feet) in northeast Washington (Pend Oreille County).

a) Will the activity be conducted in or near mountain meadows or forest openings, high elevation forests, or ungulate wintering or calving sites in the geographic areas where these listed species may occur?
No X Yes
If yes, apply the appropriate seasonal restrictions identified in the PBA to minimize disturbance

If you do not know whether your project will affect suitable habitat or feeding areas for these species, please contact the USFWS office in Spokane.

a) Effect Determination for these species and rationale. Document any supporting conversations with USFWS staff:

No effect. The project will not occur in habitats occupied by these species.

Pygmy rabbit (*Brachylagus idahoensis*)

1. The pygmy rabbit historically was found in dense, tall sagebrush areas east of the Columbia River (Douglas, Adams, Lincoln, Grant and Benton Counties).

a) Will the activity occur in native sagebrush areas of the central Columbia Plateau?
No X Put NE under "Effect Determination" and proceed to next species.
Yes If yes, contact the USFWS.

d) Effect Determination and rationale:

No effect. The project will not occur in habitats occupied by pygmy rabbits.

MATURE FORESTS in the CASCADE and OLYMPIC MOUNTAINS:

Marbled Murrelet (*Brachyramphus marmoratus*)
For information on the marbled murrelet, see http://www.fws.gov/pacific/marbledmurrelet/index.html

a) Are you within 50 miles of marine water?
No Put NE under "Effect Determination" and proceed to next species Yes X

b) Is there suitable habitat (mature conifer-dominated forests over 80 years old) within 200 feet of the project vicinity?
No X Yes Not known

c) Will the activity generate noise above ambient levels within 200 feet (1.0 mile if blasting, low-elevation aircraft operations, or pile driving) of potential suitable nesting habitat?
No X Yes If yes, apply conservation measures to minimize disturbance.

d) Does the activity include low elevation operation of aircraft, pile driving, or blasting within 1 mile of suitable or occupied nesting or foraging habitat?
No X Yes If yes, apply seasonal restrictions to minimize disturbance.

Activities in the marine environment that include pile driving or blasting may need to go through individual consultation. Contact the USFWS office in Lacey for specific restrictions related to underwater sound in marine areas.

e) Will the project affect suitable nesting habitat or designated critical for marbled murrelets? Activities that remove or kill trees with suitable platforms, remove suitable platforms, or reduce the suitability of the stand as nesting habitat are not covered under this PBA.

No

f) Notes: None.

g) Conservation Measures to be applied: Not applicable.

h) Effect Determination and rationale:

NLAA. There is no suitable habitat in the project vicinity, and the project does not occur near the marine areas where murrelets are likely to forage. Due to the highly residential nature of the Padden Creek waterway, these birds are highly unlikely to utilize the project area for nesting, though individuals may fly over the project area on their way to and from foraging and nesting sites. The project is not anticipated to generate noise levels that would rise to the level of effect for marbled murrelets, although the potential for in-air noise to raise to disturbance levels during some components of the construction activities is not entirely discountable.

Northern spotted owl (*Strix occidentalis caurina*)
For information, including critical habitat designation see
http://ecos.fws.gov/speciesProfile/SpeciesReport.do?spcode=B08B

a) Is there suitable habitat (mature conifer forests over 80 years old) within 200 feet of the project vicinity?
No X Put NE under "Effect Determination" and proceed to next species
Yes Not known

b) What type of forest habitat is present in the vicinity of the activity?
nesting or foraging habitat dispersal habitat designated critical habitat
none

d) Will the activity occur in nesting or foraging habitat?
No Yes If yes, apply seasonal operating restrictions to minimize disturbance.

e) Will the activity generate above ambient noise within 200 feet (1.0 mile if blasting, pile driving or aircraft operations) of suitable nesting habitat?
No Yes If yes, apply seasonal restrictions.

f) Will the activity occur in or remove trees from spotted owl designated critical habitat?
No Yes If yes, explain how/if this will affect the function of the stand.

g) Notes: None.

h) Conservation Measures to be applied:

i) Effect Determination for northern spotted owls: No effect due to lack of suitable habitat within 200 feet of the proposed project area.

Effect Determination for designated critical habitat for the northern spotted owl: No effect due to lack of designated critical habitat in the project area.

Listed Plants: No effect
No herbicide use, mechanical vegetation management, or construction activities are permitted in areas that could support listed plants under this programmatic.

Information on these species can be found at: http://ecos.fws.gov, the Washington Department of Fish and Wildlife Priority Habitat and Species Program at (360)-902-2543 or their website at www.wdfw.wa.gov/hab/phspage.htm, or the Washington Department of Natural Resources Natural Heritage Program at (360) 902-1667 or their website at www.dnr.wa.gov/nhp/.

1. *Hackelia venusta* **(showy stickseed)** this species occurs in Chelan County, between 984 and 1,600 feet in elevation, in the Ponderosa Pine zone

2. *Lomatium bradshawii* **(Bradshaw's desert-parsley)** – this species occurs in wetlands, prairies and grasslands in Clark County

3. *Sidalcea oregana var. calva* **(Wenatchee Mountains checker-mallow)** - this species is found in the Peshastin Creek watersheds in Chelan County. Information on critical habitat for this species can be found at: http://ecos.fws.gov/docs/federal_register/fr3793.pdf

4. *Castilleja levisecta* **(golden paintbrush)** - this plant occurs in Island, San Juan, and Thurston Counties and is found in open grasslands, prairies, and grass dominated coastal bluffs.

5. *Howellia aquatilis* **(water howellia)** – this aquatic plant is found in and around seasonal wetlands in Mason, Pierce, Thurston, Clark, and Spokane Counties.

6. *Lupinus sulphureus ssp. kincaidii* **(Kincaids lupine)** - this plant occurs near Boistfort, Lewis County in native upland prairie habitat.

7. *Sidalcea nelsoniana* **(Nelson's checkermallow)**- this plant is found in wetlands, stream corridors, or wet prairies in Lewis or Cowlitz Counties.

8. *Silene spaldingii* **(Spalding's silene/catchfly)**– this plant is also associated with native prairies and occurs in Asotin, Lincoln, Spokane, and Whitman Counties.

9. *Spiranthes diluvialis* **(Ute ladies'-tresses)** – this plant grows on the margins of springs, wet meadows, floodplains, and riparian areas in Okanagon and Grant County

Please document conversations with USFWS staff and provide adequate information on botanical surveys and/or habitat analysis to support your effect determination.

Effect determination for listed plants:

No effect on listed plant species. The project area is not within known habitat for any listed plant species.

IV SIGNATURE

I hereby verify that this work will comply with all applicable requirements of the above-referenced Biological Opinion should a Department of the Army authorization be issued for this work.

Certain categories of activities require the permittee to submit-post construction reports to the Corps and/or the Services. These reports are identified in the PBA. For projects deviating from PBA criteria, the Services may require additional post-construction reporting. These additional reports will be clearly identified and agreed upon by the Services and applicant during the coordination process. By signing this form, the applicant agrees to submit within the required time frame all applicable post-construction reports.

Signature of Applicant: Craig Newlin Date: 12-17-13

Signature of Agent: _____ Date: _____

APPENDIX A: DEWATERING AND FISH CAPTURE PROTOCOL

Work to facilitate habitat restoration may occur in isolation from flowing waters or in flowing water depending on site conditions to minimize impacts to salmonids.

If bull trout or other listed salmonids could be present in the vicinity of the project use the following dichotomous key to determine which dewatering protocol and timing window you need to implement for your project. This key references information within the *Draft Recovery Plan for the Coastal-Puget Sound Distinct Population Segment of Bull Trout Volumes I and II* (USFWS 2004a; USFWS 2004b), and the *Draft Recovery Plan for the Columbia River Distinct Population Segment of Bull Trout* (USFWS 2002). http://www.fws.gov/pacific/bulltrout/recovery.html. If you have questions, contact the USFWS.

1. Is the project located within a documented or potential bull trout Local Population Area that is excluded from coverage under this programmatic consultation (see Table 1)?
    a. Yes – Dewatering in a documented or potential bull trout Local Population Area in eastern Washington is not covered under this programmatic consultation. Complete an individual section 7 consultation for the project. Please contact the USFWS office in Spokane or Wenatchee for assistance.
    b. No – go to 2

2. Is the project located within a water body where any listed salmonids are likely to be present? For specific bull trout areas where projects are permitted see Table 2.
    a. Yes – go to 3
    b. No - use "Protocol for Dewatering Outside High Likelihood Listed Fish Areas";

3. Is the stream flow at the time of project construction anticipated to be greater than or equal to 5 cubic feet per second **and** is the dewatered stream length (not including the culvert and plunge pool length, if present) greater than or equal to 33 ft?
    a. No - use "Protocol for Dewatering Outside High Likelihood Listed Fish Areas";
    b. Yes - use "Protocol I Dewatering Within High Likelihood Listed Fish Areas"; and consult with a USFWS bull trout biologist staff on appropriate timing window.

Table 1: Bull Trout Spawning and Rearing Areas that are Excluded from the Programmatic[1]
(Listed in order of WRIA number)

Management or Recovery Unit	Core Area	Spawning and Rearing Areas Excluded (no in-water work is permitted in these areas)
Umatilla-Walla Walla River Basin	**Walla Walla Core Area WRIA 32**	Mill Creek and tributaries
		Wolf Fork above Coates Creek
		N Fk Touchet and tributaries upstream of Wolf Fk confluence
		S Fk Touchet River and tributaries above Griffin Creek
Snake River Basin	**Asotin Creek**	N Fk Asotin Creek including Charley and Cougar Creeks – above confluence with Charley Cr
	Tucannon River **WRIA 35**	Tucannon River from confluence with Little Tucannon Upper Tucannon River and tributaries above confluence with Hixon Creek Cummings Creek
Middle Columbia River Basin	**Yakima River Core Area**	**WRIA 37** N and MFk Ahtanum Creek - above the confluence of S Fk S Fk Ahtanum Creek – above confluence with N Fk Ahtanum
		WRIA 38 Rattlesnake Creek – upstream of confluence with Naches River
		WRIA 39 Taneum Creek – upstream of Taneum Campground Upper Yakima – upstream of Lake Easton Dam Cle Elum River – upstream of confluence with Yakima River N Fk Teanaway – upstream of confluence with Yakima River
Upper Columbia River Basin	**Wenatchee River Core Area WRIA 45**	Upper Wenatchee and tributaries above confluence with the Chiwawa, including Nason Cr, Little Wenatchee, White and the Chiwawa Rivers
		Chiwaukum Creek and Icicle Creek– upstream from confluence with the Wenatchee River Ingalls Creek- upstream of confluence with Peshastin Creek
	Entiat River Core Area WRIA 46	Entiat River – above confluence with the Mad River
		Mad River – above confluence with Entiat River
	Methow River Core Area WRIA 48	Upper Methow tributaries - Lost River, Early Winters Cr, W Fk Methow, Goat Cr, and Wolf Cr Chewack River – upstream of Twentymile Cr
		Twisp River and tributaries above confluence of, and including, Little Bridge Creek
		Gold Cr – upstream of confluence with Methow River
Northeast Washington	**Pend Oreille River WRIA 62**	Le Clerc Creek – upstream of mouth

[1] Spawning and rearing areas on lands administered by the U.S. Forest Service or Bureau of Land Management are not listed because these lands are not included in this Programmatic

Table 2 List of streams and marine areas that important for bull trout recovery where in-water work is permitted

Management Unit	Bull Trout Areas
Olympic Peninsula - Marine	Hood Canal and independent tributaries Strait of Juan de Fuca and independent tributaries (includes Bell, Morse, Ennis, Siebert Creeks) Pacific Ocean and independent coastal tributaries (includes Goodman, Mosquito, Cedar, Steamboat, Kalaloch and Joe Creeks, Raft, Moclips and Copalis Rivers) Lower Chehalis River/Grays Harbor and independent Tributaries (includes Humptulips, Wishkah, Wynoochee and Satsop Rivers)
Olympic Peninsula - Freshwater	**Dungeness River** – mouth to RM 10 **Skokomish River** – mouth to head of Cushman Reservoir **Hoh River** – mouth to headwaters **Queets River** – mouth to headwaters **Quiuault River** - mouth to headwaters
Puget Sound - Marine	All marine shorelines including North Puget Sound, Main Basin, Whidbey Basin, and South Puget Sound
Puget Sound - Freshwater	Samish River, Whatcom Creek, Squalicum Creek, Duwamish and lower Green River, and Lower Nisqually River including the Nisqually River estuary and McAllister Creek (FMO areas outside of core areas)
	Lake Washington including the following: lower Cedar River; Sammamish River; Lakes Washington, Sammamish, and Union; and Ship Canal
	Nooksack River – mouth to National Forest boundary (North and South Forks) **Skagit River** – mouth to National Forest boundary **Stillaguamish River** – mouth to headwaters of N Fork; Deer Creek – mouth to National Forest boundary; S Fork and Canyon Cr – mouth to National Forest boundary **Snohomish/Skykomish** – mouth to confluence of Skykomish and Snoqualmie Rivers; Pilchuck River; Snoqualmie River to falls; Tolt River; Skykomish River – mouth to National Forest boundary, including Sultan River, Woods Creek and Wallace River; S Fk Skykomish to National Forest boundary **Puyallup River** – mouth, including Mowich River, to National Park boundary; **Carbon River** – mouth to National Forest boundary; **White River** – mouth to National Forest boundary

Management Unit	Bull Trout Areas
Lower Columbia	**Lewis River** – mouth to RM 75 (Upper Falls), including Swift, Yale, and Mervin Reservoirs **Klickitat River** – mouth to confluence of W FK Klickitat
	Mainstems of the Columbia, Snake, Walla Walla, Pend Oreille, and Grande Ronde Rivers
Middle Columbia River Basin	**Ahtanum Creek** – mouth to confluence of N and S Forks **Naches River** – mouth to confluence of Little Naches and Bumping River **Tieton River** – mouth to Rimrock Lake **Yakima River** – mouth to Easton (RM 203) and Teanaway River
Upper Columbia River Basin	**Wenatchee River** – mouth to confluence of the Chiwawa; **Peshastin Cr** – mouth to confluence of Ingalls Cr; **Chewack River** – confluence with Wenatchee to RM 20; **Beaver Cr** – mouth to Blue Buck Cr **Entiat River** – mouth to confluence with Mad River **Methow River** – mouth to confluence of Lost River
Northeast Washington Pend Oreille River	**Pend Oreille River**; **Tacoma Cr** - mouth to Little Tacoma; **Small Creek** – mouth to forks; **Sullivan Creek** to and including Sullivan Lake
Walla Walla River Basin	**Touchet River** – mouth to forks; **S Fk Touchet River** – to confluence of Griffin Cr **N Fk Touchet** to Wolf Fork; **Wolf Fork** to confluence of Coates Cr **Mill Creek** and tributaries
Snake River Basin	Mainstem **Snake and Grande Ronde Rivers**; **Asotin Creek** – mouth to confluence of N Fk Asotin and Charley Cr; **Tucannon River** – mouth to confluence of Hixon Cr

Protocol I Dewatering Within High Likelihood Listed Fish Areas

A. Fish Capture – General Guidelines

1. Fish Capture Methods
    a. Minnow traps. Optional. Traps may be left in place prior to dewatering and may be used in conjunction with seining. Once dewatering starts, minnow traps should only be used if there is someone present to check the traps every few hours, and remove the traps once the water level becomes too low.
    b. Seining. Required. Use seine with mesh of a size to ensure entrapment of the residing ESA-listed fish and age classes.
    c. Sanctuary dip nets. Required. Use in conjunction with other methods as area is dewatered.
    d. Electrofishing. Optional. Use electrofishing only after other means of fish capture have been exhausted or where other means of fish capture are not be feasible. Applicants shall adhere to NMFS Backpack Electrofishing Guidelines (NMFS 2000).

2. Fish capture operations will be conducted by or under the supervision of a fishery biologist experienced in such efforts and all staff working with the capture operation must have the necessary knowledge, skills, and abilities to ensure the safe handling of all ESA-listed fish.

3. The applicant must obtain any other Federal, State and local permits and authorizations necessary for the conduct of fish capture activities.

4. A description of any capture and release effort will be included in a post-project report, including the name and address of the supervisory fish biologist, methods used to isolate the work area and minimize disturbances to ESA-listed species, stream conditions before and following placement and removal of barriers; the means of fish removal; the number and size of fish removed by species and age class; condition upon release of all fish handled; and any incidence of observed injury or mortality.

5. Storage and Release. ESA-listed fish must be handled with extreme care and kept in water at all times during transfer procedures. The transfer of ESA-listed fish must be conducted using a sanctuary net that holds water during transfer, whenever necessary to prevent the added stress of an out-of-water transfer. A healthy environment for non-ESA listed fish shall be provided by large buckets (five gallon minimum to prevent overcrowding) and minimal handling of fish. The water temperature in the transfer buckets shall not exceed the temperature of cold pool water in the subject stream. Retain fish the minimum time possible to ensure that stress is minimized, temperatures do not rise, and dissolved oxygen remains suitable. Release fish as near as possible to the isolated reach in a pool or area that provides cover and flow refuge.

B. Dewater Instream Work Area and Fish Capture

Fish screen. Except for gravity diversions that have gradual and small outfall drops directly into water, all water intake structures must have a fish screen installed, operated, and maintained in accordance with NMFS Guidelines (NMFS 1997; Chapter 11 in NMFS 2008).

The sequence for stream flow diversion will be:
Note: this sequence will take one 24-hour period prior to construction to complete (of which 12 hours are for staged dewatering with 6 hours overnight). We suggest you start in the morning the day before project construction is scheduled and leave the reach dewatered overnight according to instruction below.

1. Install flow conveyance devices (pumps, discharge lines, gravity drain lines, conduits, and channels), but do not divert flow.
2. Install upstream barrier. Allow water to flow over upstream barrier.
3. Install block net at upstream end of work area. Block nets will be checked every 4 hours, 24 hours a day. If any fish are impinged or killed on the nets they will be checked hourly.
4. Reduce flow over upstream barrier by one-third for a minimum of 6 hours.
5. Inspect as discharge is diminishing and in dewatered areas for stranded and trapped fish and remove them with sanctuary dip nets.
6. Reduce flow over upstream barrier by an additional one-third for a minimum of 6 hours.
7. Again, inspect dewatered areas for stranded and trapped fish and remove them with sanctuary dip nets.
8. Leave the project area in a stable, low flow (one third of flow) condition, overnight, allowing fish to leave the area volitionally.
9. In the morning, remove any remaining fish from the area to be dewatered using seines and/or hand held sanctuary dip-nets.
10. Divert upstream flow completely.
11. Install downstream barrier if necessary (only in low gradient, backwatered reaches).
12. If water remains within the work area; seine, dip net, and lastly electrofish (if using this technique), the project area until catch rates have reached no fish for 3 consecutive passes. Move rocks as needed to flush fish and effectively electrofish the work area.
13. If needed, pump water out of isolated pools within the project area to a temporary storage and treatment site or into upland areas and filter through vegetation prior to reentering the stream channel. Continue to seine, dip net and electrofish while pumping.
14. If fish continue to be captured, shut pump off before average water depths reach one foot. Continue to seine, dip net and electrofish until no fish are caught for 3 consecutive passes.
15. Pump dry and check substrate for remaining fish.
16. Continue to pump water from the project area as needed for the duration of the project.

The diversion structure is typically a temporary dam built just upstream of the project site with sand bags that are filled with clean gravel or stream/floodplain rock and covered with plastic sheeting. A portable bladder dam or other non-erosive diversion technologies may be used to contain stream flow. Mining of stream or floodplain rock can be used for diversion dam construction if it does not result in significant additional floodplain or stream disturbance. Often gravel has to be moved to key in logs in which case it makes sense to use this gravel for the diversion structure.

The temporary bypass system must consist of non-erosive techniques, such as a pipe or a plastic-lined channel, both of which must be sized large enough to accommodate the predicted peak flow rate during construction. In cases of channel rerouting, water can be diverted to one side of the existing channel.

Dissipate flow at the outfall of the bypass system to diffuse erosive energy of the flow. Place the outflow in an area that minimizes or prevents damage to riparian vegetation. If the diversion inlet is a gravity diversion and is not screened to allow for downstream passage of fish, place diversion outlet in a location that facilitates gradual and safe reentry of fish into the stream channel.

C. Rewater Instream Work Area

Remove stream diversion and restore stream flow. Heavy machinery operating from the bank may be used to aid in removal of diversion structures. Slowly re-water the construction site to prevent loss of surface water downstream as the construction site streambed absorbs water and to prevent a sudden increase in stream turbidity. Look downstream during re-watering to prevent stranding of aquatic organisms below the construction site.

All stream diversion devices, equipment, pipe, and conduits will be removed and disturbed soil and vegetation will be restored after the diversion is no longer needed.

Protocol II Dewatering Outside High Likelihood Listed Fish Areas

If bull trout or other listed salmonids are captured at any time during the dewatering process, immediately notify a USFWS bull trout biologist or NMFS biologist and obtain guidance to either continue to dewater and remove fish or stop activities and re-water the project site.

Normal guidance:

1. If you encounter listed fish at or prior to step 3 switch to Protocol I
2. If you encounter listed fish after step 3, continue to dewater and remove fish, paying close attention to presence of additional listed salmonids.

A. Fish Capture – General Guidelines

1. Fish Capture Methods
    a. Minnow traps. Optional. Traps may be left in place prior to dewatering and may be used in conjunction with seining. Once dewatering starts, minnow traps should only be used if there is someone present to check the traps every few hours, and remove the traps once the water level becomes too low.
    b. Seining. Required. Use seine with mesh of such a size to ensure entrapment of the residing ESA-listed fish and age classes.
    c. Sanctuary dip nets. Required. Use in conjunction with other methods as area is dewatered.
    d. Electrofishing. Optional. Use electrofishing only after other means of fish capture have been exhausted or where other means of fish capture are not be feasible. Applicants shall adhere to NMFS Backpack Electrofishing Guidelines.

2. Fish capture operations will be conducted by or under the supervision of a fishery biologist experienced in such efforts and all staff working with the seining operation must have the necessary knowledge, skills, and abilities to ensure the safe handling of all ESA-listed fish.

3. The applicant must obtain any other Federal, State and local permits and authorizations necessary for the conduct of fish capture activities.

4. A description of any seine and release effort will be included in a post-project report, including the name and address of the supervisory fish biologist, methods used to isolate the work area and minimize disturbances to ESA-listed species, stream conditions before and following placement and removal of barriers; the means of fish removal; the number and size of fish removed by species; conditions upon release of all fish handled; and any incidence of observed injury or mortality.

5. Storage and Release. Fish must be handled with extreme care and kept in water to the maximum extent possible during transfer procedures. A healthy environment for the stressed fish shall be provided by large buckets (five gallon minimum to prevent overcrowding) and minimal handling of fish. The temperature of the water shall not exceed the temperature in large deep holding pools of the subject system. The transfer of any ESA-listed fish must be conducted using a sanctuary net that holds water during transfer, to prevent the added stress of

an out-of-water transfer. Retain fish the minimum time possible to ensure that stress is minimized, temperatures do not rise, and dissolved oxygen remains suitable. Release fish as near as possible to the isolated reach in a pool or area that provides cover and flow refuge.

B. Dewater Instream Work Area and Fish Capture

Fish screen. Except for gravity diversions that have gradual and small outfall drops directly into water, all water intake structures must have a fish screen installed, operated, and maintained in accordance with the NMFS Guidelines (NMFS 1997; Chapter 11 in NMFS 2008).

The sequence for stream flow diversion would be as follows:

1. Install flow conveyance devices (pumps, discharge lines, gravity drain lines, conduits, and channels), but do not divert flow.
2. Install block net at upstream end or work area.
3. Seine and dip net through the entire project area in a downstream direction, starting at the upstream end; thereby moving fish out of the project area. Then, if necessary electrofish.
4. Install upstream barrier and divert upstream flow completely.
5. Capture any remaining fish using hand held dip-nets.
6. Install downstream barrier if necessary (only in low gradient backwatered reaches).
7. If water remains within the work area; seine and dip net, if necessary electrofish the project area until catch rates have reached no fish for 3 consecutive passes.
8. Pump water out of isolated pools within the project area to a temporary storage and treatment site or into upland areas and filter through vegetation prior to re-entering the stream channel. Continue to seine, dip net, or electrofish while pumping.
9. If fish continue to be captured, shut pump off before average water depths reach one foot. Continue to seine, dip net, or electrofish until no fish are caught for 3 consecutive passes.
10. Pump dry and check substrate for remaining fish and remove them.
11. Continue to pump water from the project area as needed for the duration of the project.

The diversion structure is typically a temporary dam built just upstream of the project site with sand bags that are filled with clean gravel or stream/floodplain rock and covered with plastic sheeting. A portable bladder dam or other non-erosive diversion technologies may be used to contain stream flow. Mining of stream or floodplain rock can be used for diversion dam construction if it does not result in significant additional floodplain or stream disturbance. Often gravel has to be moved to key in logs in which case it makes sense to use this gravel for the diversion structure.

The temporary bypass system must consist of non-erosive techniques, such as a pipe or a plastic-lined channel, both of which must be sized large enough to accommodate the predicted peak flow rate during construction. In cases of channel rerouting, water can be diverted to one side of the existing channel.

Dissipate flow at the outfall of the bypass system to diffuse erosive energy of the flow. Place the outflow in an area that minimizes or prevents damage to riparian vegetation. If the diversion inlet is a gravity diversion and is not screened to allow for downstream passage of fish, place diversion outlet in a location that facilitates gradual and safe reentry of fish into the stream channel.

C. Rewater Instream Work Area

Remove stream diversion and restore stream flow. Heavy machinery operating from the bank may be used to aid in removal of diversion structures. Slowly re-water the construction site to prevent loss of surface water downstream as the construction site streambed absorbs water and to prevent a sudden increase in stream turbidity. Look downstream during re-watering to prevent stranding of aquatic organisms below the construction site.

All stream diversion devices, equipment, pipe, and conduits will be removed and disturbed soil and vegetation will be restored after the diversion is no longer needed.

Literature Cited

NMFS (National Marine Fisheries Service). 1997. Fish Screening Criteria for Anadromous Salmonids. NMFS Southwest Region, (January 1997). 12 p. http://swr.nmfs.noaa.gov/hcd/fishscrn.pdf

NMFS (National Marine Fisheries Service). 2000. Guidelines for Electrofishing Waters Containing Salmonids Listed Under the ESA. http://www.nwr.noaa.gov/ESA-Salmon-Regulations-Permits/4d-Rules/upload/electro2000.pdf

NMFS (National Marine Fisheries Service). February 2008. ANADROMOUS SALMONID PASSAGE FACILITY DESIGN. http://www.nwr.noaa.gov/Salmon-Hydropower/FERC/upload/Fish_Passage_Design.pdf

USFWS (USFWS). 2002. Bull trout (*Salvelinus confluentus*) draft recovery plan. Chapter One. Fish and Wildlife Service, Portland, Oregon. 137 pp.

USFWS (USFWS). 2004a. Draft Recovery Plan for the Coastal-Puget Sound Distinct Population Segment of Bull Trout (*Salvelinus confluentus*). Volume I (of II): Puget Sound Management Unit. Portland, Oregon. 389 + xvii pp.

USFWS (USFWS). 2004b. Draft Recovery Plan for the Coastal-Puget Sound Distinct Population Segment of Bull Trout (*Salvelinus confluentus*). Volume II (of II): Olympic Peninsula Management Unit. Portland, Oregon. 277 + xvi pp.

LITERATURE CITED

Bates, K., B. Bernard, B. Heiner, J.P. Klavas, and P.D. Powers. 2003. Design of Road Culverts for Fish Passage. Washington Department of Fish and Wildlife, Olympia, WA. http://wdfw.wa.gov/hab/engineer/cm/culvert_manual_final.pdf

NMFS (National Marine Fisheries Service). 2000. Guidelines for Electrofishing Waters Containing Salmonids Listed Under the Endangered Species Act.

Appendix F

SAIC

Summary Form for Fish-Passage Design Data
No-Slope and Stream-Simulation Design Options

Project Identification:

Stream name: Padden Creek **Date:** 8/5/2013 **WRIA:** 1
Tributary to: Bellingham Bay **Name of road crossing:** 22nd Street
Road owner: City of Bellingham **Designer:** SAIC
Contact (phone, email): Contact: Craig Mueller 360.778-7922

Brief Narrative of Project:

This project consists of daylighting a 2250-foot reach of Padden Creek that is currently routed through a tunnel. Daylighting the creek requires that a culvert be used to pass the creek underneath 22nd Street.

Design Option Used **Stream Simulation** **No slope**

Description of Culvert

	Existing		Proposed	
Shape:	None		Box	
Material:			Concrete	
Rise:		ft	4 ft 2in	ft
Span:		ft	20	ft
Upstream invert elevation:			101.22	
Downstream invert elevation:			101.22	
Length:		ft	72	ft
Slope:		ft/ft	0.00	ft/ft
Culvert countersink (upstream):			1.05	ft
Culvert bed width (upstream):		ft	15	ft
Culvert countersink (downstream):			0.8	
Culvert bed width (downstream):		ft	15	ft
Culvert skew angle to stream:		deg	0	deg
Slope ratio (channel slope/culvert-slope)			0.35%/0%	
Height of road fill		ft	8.8	ft

Bed material within culvert (Natural or imported, D100, D84, D50 and D16, if available, or verbal characterization such as, "nine-inch-minus, well-graded river rock."):
Streambed gravel shall meet WSDOT standard specification 9-03.11(1)

How is imported bed material designed for stability? Streambed material was sized so it will remain in the culvert for the 100-year event.

Additional culvert information, other conditions or concerns:
A sanitary sewer line will pass only 2 inches below the bottom Of this culvert. The sewer line cannot be relocated.

Fish

Species of fish likely to be present and any special passage requirements that the culvert must satisfy:

Coho Salmon, Fall Chinook, Fall Chum, Resident Cutthroat and Winter Steelhead could be found within Padden Creek.

Hydrology

Estimated Low- and Peak-Flood Flows (cfs):

	Q_2	Q_{100}
Current watershed conditions	71 cfs	280 cfs
Future watershed conditions	71 cfs	280 cfs

Describe how flows were estimated and what the assumptions are for future conditions (necessary only for Stream-Simulation Design Option): The Q2 was estimated using HSPF. The Q100 is based on flows provided by FEMA.

Upstream Channel Description

Elevation of streambed at upstream end of culvert: 102.02
Upstream channel slope: 0.35* ft/ft
Channel-bed width (average of three measurements over a length of 20 channel widths or a minimum of 200 ft. Please see Appendix H) 12 * ft

Streambed material type and the basis of vertical control (wood- or rock-dominated):

Streambed size distribution: (other sizes for Stream-Simulation Method):
D_{100} _____
D_{84} _____
D_{50} _____
D_{16} _____

There are several roadway crossings (24th, SR 11 and I-5) that would trap most of the wood upstream from the project. Per City of Bellingham staff, Padden Creek is not a big sediment producer.

Is there evidence of a significant amount of bed-material transport? Y **N**

Is the channel in equilibrium (not aggrading or degrading)? Y **N**

Is there a significant amount of mobile, woody debris present? Y **N**

Provide proposed grade-control information. Include type, elevation and distance from culvert: A culvert at 24th St approximately 670 feet upstream and the culvert controls the upstream creek grade.

Structures in bed or channel that could be exposed or undermined by upstream channel regrade: N/A

Additional upstream information, other conditions or concerns:

Downstream-Channel Description

Elevation of streambed at downstream control point: 100.22
Downstream channel slope: 0.35 ft/ft
Channel-bed width: 16 ft
Streambed material type: WSDOT Streambed Sediment

*No existing stream channel. Information is provided for the daylighted channel. OHW width of existing channel 150 upstream is 15 feet.

Provide proposed grade-control information. Include type, elevation and distance from culvert:
Boulder cascades are provided to control the grade in the steeper section of creek about 1500 feet downstream

Structures in bed or channel that could be affected by culvert design and installation:
The existing sanitary sewer will need to pass underneath the culvert.

Additional Information

Describe any existing or proposed structures or natural features that would be detrimental to fish passage, interfere with compliance with regulations or compromise habitat considerations. Examples of this may include trash racks, sediment basins, storm-water-control devices, existing upstream or downstream barrier culverts, or bedrock chutes.

WASHINGTON STATE
Joint Aquatic Resources Permit Application (JARPA) Form[1,2]

US Army Corps of Engineers
Seattle District

USE BLACK OR BLUE INK TO ENTER ANSWERS IN THE WHITE SPACES BELOW.

AGENCY USE ONLY

Date received:

Agency reference #: _____

Tax Parcel #(s): _____

Part 1–Project Identification

1. Project Name (A name for your project that you create. Examples: Smith's Dock or Seabrook Lane Development) [help]
Padden Creek Daylighting Project

Part 2–Applicant

The person and/or organization responsible for the project. [help]

2a. Name (Last, First, Middle)			
Craig Mueller, P.E.			
2b. Organization (If applicable)			
City of Bellingham			
2c. Mailing Address (Street or PO Box)			
210 Lottie Street			
2d. City, State, Zip			
Bellingham, WA 98225			
2e. Phone (1)	**2f.** Phone (2)	**2g.** Fax	**2h.** E-mail
(360) 778-7900	(651) 238-0336	(360) 778-7901	camueller@cob.org

[1] Additional forms may be required for the following permits:
- If your project may qualify for Department of the Army authorization through a Regional General Permit (RGP), contact the U.S. Army Corps of Engineers for application information (206) 764-3495.
- If your project might affect species listed under the Endangered Species Act, you will need to fill out a Specific Project Information Form (SPIF) or prepare a Biological Evaluation. Forms can be found at http://www.nws.usace.army.mil/Missions/CivilWorks/Regulatory/PermitGuidebook/EndangeredSpecies.aspx.
- Not all cities and counties accept the JARPA for their local Shoreline permits. If you need a Shoreline permit, contact the appropriate city or county government to make sure they accept the JARPA.

[2] To access an online JARPA form with [help] screens, go to http://www.epermitting.wa.gov/site/alias__resourcecenter/jarpa_jarpa_form/9984/jarpa_form.aspx.

For other help, contact the Governor's Office of Regulatory Assistance at 1-800-917-0043 or help@ora.wa.gov.

Part 3–Authorized Agent or Contact

Person authorized to represent the applicant about the project. (Note: Authorized agent(s) must sign 11b of this application.) [help]

3a. Name (Last, First, Middle)			
Same as the applicant. See Part 2.			
3b. Organization (If applicable)			
3c. Mailing Address (Street or PO Box)			
3d. City, State, Zip			
3e. Phone (1)	**3f.** Phone (2)	**3g.** Fax	**3h.** E-mail
()	( )	( )	

Part 4–Property Owner(s)

Contact information for people or organizations owning the property(ies) where the project will occur. Consider both **upland and aquatic** ownership because the upland owners may not own the adjacent aquatic land. [help]

☐ Same as applicant. (Skip to Part 5.)

☐ Repair or maintenance activities on existing rights-of-way or easements. (Skip to Part 5.)

☒ There are multiple upland property owners. Complete the section below and fill out JARPA Attachment A for each additional property owner.

☐ Your project is on Department of Natural Resources (DNR)-managed aquatic lands. If you don't know, contact the DNR at (360) 902-1100 to determine aquatic land ownership. If yes, complete JARPA Attachment E to apply for the Aquatic Use Authorization.

4a. Name (Last, First, Middle)			
Same as applicant			
4b. Organization (If applicable)			
4c. Mailing Address (Street or PO Box)			
4d. City, State, Zip			
4e. Phone (1)	**4f.** Phone (2)	**4g.** Fax	**4h.** E-mail
( )	( )	( )	

Part 5–Project Location(s)

Identifying information about the property or properties where the project will occur. [help]

☐ There are multiple project locations (e.g. linear projects). Complete the section below and use JARPA Attachment B for each additional project location.

5a. Indicate the type of ownership of the property. (Check all that apply.) [help]

☒ Private (easements)
☐ Federal
☒ Publicly owned (state, county, city, special districts like schools, ports, etc.)
☐ Tribal
☐ Department of Natural Resources (DNR) – managed aquatic lands (Complete JARPA Attachment E)

5b. Street Address (Cannot be a PO Box. If there is no address, provide other location information in 5p.) [help]

From approximately 22nd Street and Old Fairhaven Parkway to about 18th Street and Old Fairhaven Parkway

5c. City, State, Zip (If the project is not in a city or town, provide the name of the nearest city or town.) [help]

Bellingham, WA 98225

5d. County [help]

Whatcom

5e. Provide the section, township, and range for the project location. [help]

¼ Section	Section	Township	Range
NE	12	37N	2E

5f. Provide the latitude and longitude of the project location. [help]

- Example: 47.03922 N lat. / -122.89142 W long. (Use decimal degrees - NAD 83)

48.716 N/-122.489 W

5g. List the tax parcel number(s) for the project location. [help]

- The local county assessor's office can provide this information.

N/A

5h. Contact information for all adjoining property owners. (If you need more space, use JARPA Attachment C.) [help]

Name	Mailing Address	Tax Parcel # (if known)
Richard L Sullivan	1727 22nd Street, Bellingham, WA 98225	370212521525
City of Bellingham	210 Lottie Street, Bellingham, WA 98225	370212505526 370212346507 370212326512
Carolyn Blethen	1714 22nd Street, Bellingham, WA 98225	370212503533
People's Land Trust	PO Box 4002, Bellingham, WA 981227	370212467546
Zachariah S West Trust	1209 15th Street, Bellingham WA, 98225	370212492532

Scott D Brennan	1710 22nd Street, Bellingham, WA 98225	370212506543 370212493545
Joseph B and Anna J Deeny JT	2104 Wilson Ave, Bellingham, WA 98225	370212485548
City of Bellingham	210 Lottie Street, Bellingham, WA 98225	370212458535
Jerry H Tegarden	2008 Wilson Ave, Bellingham, WA 98225	370212466549
PMC Properties, LLC	842 Wiser Lake Road, Lynden, WA 98264	370212416537
Padden Creek Associates, LLC	1326 Fifth Ave #711 Seattle, WA 98101	370212420507
City of Bellingham Park Department	3424 Meridian St, Bellingham, WA 98225	370212393510
Monty M Smith	PO Box 696, Bellingham, WA 98227	370212538531

5i. List all wetlands on or adjacent to the project location. [help]

Wetlands A, B, S-2 and S-D. Wetland Mitigation Areas 2 and 3 for the Parkway Gardens Development. Refer to Attachment C, Sheet 4; and Attachment B (Anchor QEA 2012)

5j. List all waterbodies (other than wetlands) on or adjacent to the project location. [help]

Padden Creek; Tributary 1

5k. Is any part of the project area within a 100-year floodplain? [help]

☒ Yes ☐ No ☐ Don't know

5l. Briefly describe the vegetation and habitat conditions on the property. [help]

The Padden Creek Daylighting Project site pre-project conditions include areas of fill and existing low-lying areas where Padden Creek used to flow prior to the construction of the tunnel. Four wetlands have been delineated within the project limits (See Attachment B, Anchor QEA 2012). Wetland habitats include depressional, riverine, and slope wetlands. Existing wetlands are located in the ditches adjacent to Old Fairhaven Parkway and 20th Street (Wetlands S-D and S-2, Attachment C, Sheet 4). In addition, existing wetlands are located in the Padden Creek remnant channel south of Old Fairhaven Parkway near the Fairhaven Park parking lot (Wetlands A and B, Attachment C, Sheet 7). There are also wetlands (Areas 2 and 3) on the project site that are the result of wetland mitigation for the Parkway Gardens Project, which is located in the northwest corner of the intersection of Old Fairhaven Parkway and 20th Street. See Sheet 8. Photographs of Wetland A, B and S-2 are included in Attachment H.

Wetland vegetation community types include palustrine forested (PFO), palustrine scrub-shrub (PSS), and palustrine emergent (PEM) wetland systems. Vegetation within the project area includes native and nonnative tree, shrub, grass, and herbaceous species associated with upland and wetland habitats.

Padden Creek is a perennial flow stream with potential fish habitat characteristics (City of Bellingham 2012. City of Bellingham Municipal Code). It currently flows through a tunnel for the length of the project, which presents a fish passage barrier due to its length and a steep gradient at the upstream transition from brick to concrete. Because the creek is contained within a tunnel, it also does not provide the biological processes of a natural channel that help to improve water quality. In addition, the tunnel has had debris blockages at the entrance and has insufficient capacity to convey the 100-year storm event, which has resulted in flooding.

There is no wetland habitat associated with Padden Creek within the project limits. The creek's eastern and western reaches are defined by steep slopes with a mix of native and nonnative tree, shrub, grass, and herbaceous species. Tributary 1, located south of Old Fairhaven Parkway, flows west to its confluence with the western reach of Padden Creek. It is a seasonal flow stream that lacks potential fish habitat characteristics (City of Bellingham 2012) and is associated with one of the wetlands delineated within the project limits.

5m. Describe how the property is currently used. [help]

The property situated on City or Washington Department of Transportation (WSDOT) Right-of-Way (administered by the City) or easements acquired as part of the project. At the time of this submittal the acquisition of easements for Parcel 370212503533, Parcel 370212467546, Parcel 370212416537 and Parcel 370212420507 are still pending. The applicant does not intend to move forward with the project until the easements for all properties have been acquired.

Station 0+00 to about Station 10+50 (refer to Attachment C Sheets 6-10 through for stationing) is primarily within Interurban Greenway and Trail and is used as a local drainage channel primarily for Tributary 1.

Station 10+50 to about Station 12+00 is currently being occupied by the embankment for Old Fairhaven Parkway (SR 11).

Station 12+00 to about Station 13+20 is currently set aside for the construction of the daylighted Padden Creek channel construction as mitigation for the Parkway Gardens development.

Station 13+20 to about Station 13+80 is currently occupied by the 20th Street Right-of-Way and embankment.

Station 13+80 to about 19+20 is primarily occupied by the unimproved Happy Court Right-of-Way. This area also includes easements consisting of portions of single family residential lots. The existing tunnel parallels the proposed channel on the north side through this area. In addition, an existing sewer pipe parallels the south side of the channel from about Station 16+00 to Station 18+50.

Station 19+20 to about 20+90 is occupied by the 22nd Street roadway Right-of-Way and embankment.

Station 20+90 to the upstream end of the project includes WSDOT Right-of-Way, as well as unimproved City Right-of-Way.

5n. Describe how the adjacent properties are currently used. [help]

The adjacent properties are being used either as greenways, single family or multifamily residential, roadways and a parking lot for the Interurban Greenway and Trail.

5o. Describe the structures (above and below ground) on the property, including their purpose(s) and current condition. [help]

Refer to Attachment C Sheets 6-10. Structures on the property include streets (22nd Street and 20th Street), a State Route (Old Fairhaven Parkway) and a parking lot for the Interurban Greenway and Trail. The project site also includes various utilities for water, sewer, gas, power, telecommunications and storm drainage.

In addition, an approximately 2,310-foot-long tunnel that currently conveys Padden Creek runs through portions of the project site. The tunnel consists primarily of a 6-foot-high by 4-foot-wide brick tunnel with sections of 60-inch-diameter concrete pipe at the upstream and downstream ends. The tunnel is located within the project site starting at the north side of Old Fairhaven Parkway just west of 20th Street at about Station 11+75 (See Sheet 8) and ending to the east side of 22nd Street at the upstream end of the project (See Sheet 10). In addition, the downstream end of the tunnel (at about Station 1+25) is included within the project limits. The remainder of the tunnel parallels the project site.

A barn currently encroaches on the Happy Court Right-of-Way just west of the 21st Street Right-of-Way. Refer to Sheet 9. It is anticipated that the barn will be removed by outside parties prior to construction of this project. In addition, there is a shed on the easement acquired from Tax Parcel 370212503533 that will be removed.

There are existing sanitary sewers that will pass underneath the daylighted creek at several locations. Please refer to sheets 6, 7, 9 and 10.

At the time of this application, WSDOT is constructing a bridge under Old Fairhaven Parkway during the summer of 2013. The bridge will be within the project limits from about Station 10+75 to 11+75. Refer to Sheet 8.

5p. Provide driving directions from the closest highway to the project location, and attach a map. [help]

Refer to Attachment G for a map with driving directions. From I-5 exist at Exit 250 for Old Fairhaven Parkway (SR 11). Turn west and travel about 0.7 miles to 22nd Street. Turn right on 22nd Street. This is this upstream end of the project.

Part 6–Project Description

6a. Briefly summarize the overall project. You can provide more detail in 6b. [help]

This project includes daylighting 2,310 linear feet of Padden Creek which currently flows through a tunnel. Specifically, the project will construct a natural creek channel from the tunnel entrance in the northeast quadrant of 22nd Street and Old Fairhaven Parkway to where the tunnel exits on the south side of Old Fairhaven Parkway near 18th Street. The flow in the creek will be re-routed to the new channel and the tunnel will be blocked such that all the creek flow will be re-routed into the new creek channel.

Most of the new channel will be constructed to provide pool and riffle habitats. Boulder cascades are included in the downstream-most section of the creek where the channel gradient steepens (Station 1+50 to Station 5+50) (See Sheet 6, Attachment C). The boulder cascades are designed to provide fish passage through this section. The boulder cascades consist of short steeper sections of channel lined with boulders to roughen the channel, control the channel gradient, and dissipate energy in order to maintain a diverse range of water depths and velocities needed for fish passage.

Daylighting the creek will require the construction of a new box culvert at 22nd Street to pass flows under the roadway (Sheet 10). The new culvert was designed using the Washington Department of Fish and Wildlife's zero-slope method to provide fish passage while limiting the culvert rise to avoid conflicts with the existing sanitary sewer pipe. The width of the culvert is actually slightly wider than the standard width required under this method. 20th Street will be converted to a dead end street such that an open channel can be constructed in the location of the current Right-of-Way without the need for a culvert (Sheet 8). Creating a dead end street at this location allows a portion of the Right-of-Way to be used for riparian purposes.

A bridge was constructed by WSDOT as a separate project to allow for the creek to pass underneath the Old Fairhaven Parkway just west of 20th Street (Sheet 8). Three 48-inch-diameter 141-foot-long concrete culverts are currently located where the bridge will be. These three culverts will be removed as part of the project.

A pedestrian bridge will be provided to allow pedestrians to cross the daylighted creek. The bridge is designed such that the low chord is above the 100-year water surface elevation such that the full channel cross section can be used for riparian purposes.

The project includes creating new wetlands in the floodplain along the edge of the daylighted creek to replace wetlands impacted by the stream restoration. The new wetlands will receive hydrology directly from the creek, precipitation and from existing seeps or springs. Flows based on gaged data was used in conjunction with a HEC-RAS model to verify that water levels in the creek will be within 12 inches of the wetland elevations for 30 consecutive days within the growing season.

A bioretention swale is included on the east side of 20th Street to treat flows tributary to Padden Creek. The infiltration capacity of the soils at the site is low such that an underdrain is required. As the result of physical constraints at the site and in order to ensure the underdrain will drain the bioretention swale, the depth of bioretention soil mix over the top of the underdrain was reduced to 10 inches. The performance of the bioretention swale with this reduced soil depth was modeled in MGSFlood. The results of the model show that more than 91 percent of the volume of runoff will be treated by the bioretention swale, which matches the target

volume for water quality treatment required by Washington Department of Ecology.

A weir structure is proposed at the outlet of the tunnel. The weir will prevent fish from entering the tunnel in order to promote fish use of the new daylighted channel. See Sheets 6 and 19. The upstream end of the tunnel will be blocked to divert all flows into the existing channel. See Sheets 10 and 20

An upland wall is included near the steeper creek section from about Station 4+00 to Station 5+00. The wall will help minimize the disturbance required to construct the channel through this area.

6b. Describe the purpose of the project and why you want or need to perform it. [help]

Padden Creek is currently routed through a 2,310-foot-long tunnel. The tunnel contributes to the degradation the creek's water quality by eliminating natural riparian buffers, interrupting the stream's interconnection to interflow and groundwater, and reducing the stream's natural morphology and biological integrity. The tunnel also presents a passage barrier to fish and has insufficient capacity to convey a 100-year storm event. The project will daylight the creek, restoring natural stream morphology, providing biological uplift and fish passage, and reducing flooding potential.

The project will:

- Restore permanent native vegetated riparian buffers to protect the creek, increase evapotranspiration and treat stormwater runoff entering the creek as well as provide shade and a source of leaf litter.
- Restore natural pools and riffles to provide aeration for the creek flow which will increase habitat diversity and increase dissolved oxygen concentrations.
- Add large woody debris to re-establish biologic integrity.
- Re-establish infiltration and groundwater recharge of the creek to improve water quality and lower temperatures.
- Provide water quality treatment of inflow from the stormdrains discharging to the creek via a bioretention swale.
- Help alleviate flooding for 159 residential structures.
- Correct a fish passage barrier.

6c. Indicate the project category. (Check all that apply) [help]

☐ Commercial ☐ Residential ☐ Institutional ☒ Transportation ☐ Recreational
☐ Maintenance ☒ Environmental Enhancement

6d. Indicate the major elements of your project. (Check all that apply) [help]

☐ Aquaculture	☒ Culvert	☐ Float	☒ Retaining Wall (upland)
☐ Bank Stabilization	☐ Dam / Weir	☐ Floating Home	☒ Road
☐ Boat House	☐ Dike / Levee / Jetty	☐ Geotechnical Survey	☐ Scientific Measurement Device
☐ Boat Launch	☐ Ditch	☒ Land Clearing	☐ Stairs
☐ Boat Lift	☐ Dock / Pier	☐ Marina / Moorage	☒ Stormwater facility
☒ Bridge	☐ Dredging	☐ Mining	☐ Swimming Pool
☐ Bulkhead	☐ Fence	☐ Outfall Structure	☐ Utility Line
☐ Buoy	☐ Ferry Terminal	☐ Piling/Dolphin	
☒ Channel Modification	☐ Fishway	☐ Raft	

☒ Other: Wetland Mitigation, New Channel Construction.

6e. Describe how you plan to construct each project element checked in 6d. Include specific construction methods and equipment to be used. [help]

- Identify where each element will occur in relation to the nearest waterbody.
- Indicate which activities are within the 100-year floodplain.

Please refer to Table 8e for a list of project activities and Attachment C for the exact location of each project activity. All activities are within the 100-year FEMA floodplain.

The primary equipment that will be used during construction of the project includes excavators and dump trucks. A crane or boom truck will be used to install the precast box culvert at 22nd Street and the pedestrian bridge. An asphalt paver will be used to restore 22nd Street after installation of the culvert and the parking lot.

Prior to start of the construction, the City will prepare a construction stormwater pollution prevention plan as part of the project Stormwater Report and will include the project drawings. The site will be surveyed and the construction limits flagged and a water quality monitoring plan will be activated. Temporary erosion and sediment control measures will be implemented to minimize construction impacts to water quality.

The precast box culvert and pedestrian bridge will be constructed prior to Padden Creek being diverted into the new channel. This work will be performed in the dry and no temporary flow bypass will be necessary.

The new Padden Creek channel will be constructed using streambed gravels, cobbles, boulders, riparian plantings and large woody debris. The construction of the new channel will be separated from any backwater from Padden Creek on the downstream end using a temporary gravel bag cofferdam. The channel will first be constructed up to about Station 22+00 near the upstream entrance to the tunnel. Once the channel construction has reached this point, a temporary bypass system consisting of gravel bag cofferdams and pipe will be used to intercept stream flow upstream of the tunnel entrance and route it to the tunnel to remove flow from the work area. Please refer to Attachment C, Sheet 25. Fish block nets will be used to hand net fish from work area. Once the fish are removed, the temporary creek bypass system will be activated to keep creek flow from entering the work site. When the fish are removed and the temporary bypass is activated, the upper-most portion of the channel will be constructed and a portion of the tunnel and wingwalls will be removed. The flow will not be diverted into the new channel until the new channel has been sufficiently restored and stabilized at the end of the project.

The construction site will be restored once earthwork is completed. Site restoration includes planting native vegetation within the project area per the proposed restoration plan (Sheets 30 through 34). Once the site is restored, the temporary bypass will be removed to allow stream flow back through the project site. Finally the temporary erosion and sediment control best management practices (BMPs) facilities will be removed.

The retaining wall (Sheet 6) will be constructed high on the bank of the new creek channel outside of the ordinary high water. The wall will be constructed from the interurban trail using a backhoe.

The stormwater facility (bioretention swale) will be constructed using an excavator.

A temporary bypass using gravel coffer dams and piping will be used to bypass Padden Creek flows around the construction of the weir structure at the outlet of the tunnel (Sheets 6, 19 and 21). The weir at the tunnel outlet will be constructed using concrete and temporary formwork, which will be lowered to the site from Old Fairhaven

Parkway or the Interurban trail using a boom truck, and concrete trucks and pumps.

The stop log wall (Sheet 10 and 20) will be constructed of concrete using temporary formwork and concrete trucks and pumps.

Planting of wetlands and buffer areas would occur after all grading and placement of materials for the stream restoration work is completed. Existing soils will be salvaged if suitable and amended as appropriate for the various planting areas. Newly established stream banks will be covered with a coir fabric soil wrap. Jute matting shall be placed on slopes at 3:1 or steeper within the stream and wetland buffer areas. Coir fabric, jute matting, and coir soil wraps will be placed and anchored by hand with wooden stakes or metal staples.

All areas above the OHW elevation and within the wetland and stream buffer areas will be planted with native vegetation at appropriate elevations and locations (Figures 30 through 34). Live stakes and poles will be installed on the steeper stream bank sections between the OHW elevation and up to about 3 feet above that elevation. Native wetland and riparian shrubs and trees will be installed throughout the restored wetland and buffer areas; emergent plant species will be installed within the bioswale adjacent to 20th Street. Plant installation will occur by hand and will be completed by the Conservation Corps and City-led volunteer work parties.

6f. What are the anticipated start and end dates for project construction? (Month/Year) [help]

- If the project will be constructed in phases or stages, use JARPA Attachment D to list the start and end dates of each phase or stage.

Start date: June 1, 2015 (anticipated) End date: October 31, 2015 (anticipated) ☐ See JARPA Attachment D

6g. Fair market value of the project, including materials, labor, machine rentals, etc. [help]

$3,200,000

6h. Will any portion of the project receive federal funding? [help]

- **If yes**, list each agency providing funds.

☐ Yes ☒ No ☐ Don't know

Part 7–Wetlands: Impacts and Mitigation

☒ Check here if there are wetlands or wetland buffers on or adjacent to the project area.
(If there are none, skip to Part 8.) [help]

7a. Describe how the project has been designed to avoid and minimize adverse impacts to wetlands. [help]

☐ Not applicable

To restore Padden Creek within its historic channel alignment, some wetland impacts will be unavoidable. Refer to Attachment C Sheets 35 and 36. However, the project has been designed to minimize impacts to these wetlands. Permanent impacts to wetlands are limited to areas where wetlands are to be converted to stream and associated floodplain wetlands as part of the overall stream restoration project. All wetland areas impacted or displaced by the stream daylighting activities are being replaced on site and in-kind at a minimum ratio of 1:1. Replacement wetlands will be created within the floodplain on benches adjacent to the daylighted creek (Attachment C Sheets 30 through 34).

The project will improve overall aquatic functions on site by restoring Padden Creek to a daylighted channel and reconnecting it to its floodplain wetlands. The restored wetlands will be monitored according to agency requirements.

Additional potential temporary wetland impacts associated with construction will be reduced or avoided by implementation of the conservation and performance measures outlined in 8a.

7b. Will the project impact wetlands? [help]

☒ Yes ☐ No ☐ Don't know

7c. Will the project impact wetland buffers? [help]

☒ Yes ☐ No ☐ Don't know

7d. Has a wetland delineation report been prepared? [help]

- **If Yes**, submit the report, including data sheets, with the JARPA package.

☒ Yes ☐ No See Attachment B

7e. Have the wetlands been rated using the Western Washington or Eastern Washington Wetland Rating System? [help]

- **If Yes**, submit the wetland rating forms and figures with the JARPA package.

☒ Yes ☐ No ☐ Don't know

7f. Have you prepared a mitigation plan to compensate for any adverse impacts to wetlands? [help]

- **If Yes**, submit the plan with the JARPA package and answer 7g.
- **If No, or Not applicable**, explain below why a mitigation plan should not be required.

☐ Yes ☒ No ☐ Not applicable

The project qualifies for a U.S. Army Corps of Engineers Nationwide Permit # 27 Aquatic Habitat Restoration, Establishment and Enhancement Activities, and a mitigation plan is not required. While the project will directly impact 0.44 acres in Wetlands A, B, S-D, S-2, and wetland mitigation areas 2 and 3 associated with the Parkway Gardens development, all impacts occur as a result of the restoration project. Wetlands impacted by the proposed restoration activities will be replaced on-site and in-kind at a 1:1 ratio for a total of .5 acres of wetlands. See Attachment C, Sheets 30 through 34.

7g. Summarize what the mitigation plan is meant to accomplish, and describe how a watershed approach was used to design the plan. [help]

Not applicable.

7h. Use the table below to list the type and rating of each wetland impacted, the extent and duration of the impact, and the type and amount of mitigation proposed. Or if you are submitting a mitigation plan with a similar table, you can state (below) where we can find this information in the plan. [help]

Activity (fill, drain, excavate, flood, etc.)	Wetland Name[1]	Wetland type and rating category[2]	Impact area (sq. ft. or Acres)	Duration of impact[3]	Proposed mitigation type[4]	Wetland mitigation area (sq. ft. or acres)
Stream Restoration	Wetland A	Category III	1181 sf	Permanent		
Stream Restoration	Wetland A	Category III	4827 sf	Permanent		
Stream Restoration	Wetland B	Category II	3229 sf	Permanent		
Stream Restoration	Wetland B	Category II	5747 sf	Permanent		
Stream Restoration	Wetland S-D	Category III	77 sf	Permanent		
Stream Restoration	Wetland S-2	Category II	2069 sf	Permanent		
Stream Restoration	Wetland S-2	Category II	185 sf	Permanent		
Stream Restoration	Wetland Mitigation Area 2	N/A	414 sf	Permanent		
Stream Restoration	Wetland Mitigation Area 3	N/A	820 sf	Permanent		
Total			19,312 (0.44 acres)			

Please refer to Attachment C, Sheets 30 through 36 wetland impacts and restoration plans

[1] If no official name for the wetland exists, create a unique name (such as "Wetland 1"). The name should be consistent with other project documents, such as a wetland delineation report.
[2] Ecology wetland category based on current Western Washington or Eastern Washington Wetland Rating System. Provide the wetland rating forms with the JARPA package.
[3] Indicate the days, months or years the wetland will be measurably impacted by the activity. Enter "permanent" if applicable.
[4] Creation (C), Re-establishment/Rehabilitation (R), Enhancement (E), Preservation (P), Mitigation Bank/In-lieu fee (B)

Page number(s) for similar information in the mitigation plan, if available: _____

7i. For all filling activities identified in 7h, describe the source and nature of the fill material, the amount in cubic yards that will be used, and how and where it will be placed into the wetland. [help]

120 cubic yards of fill material will be placed in Wetland A, 208 cubic yards of fill in Wetland B, 4 cubic yards in Wetland S-D, 73 cubic yards in Wetland S-2, 8 cubic yards in Wetland Mitigation Area 2, and 15 cubic yards in Wetland Mitigation Area 3. The fill material will consist of streambed boulders, gravel and cobbles associated with the channel restoration within the low flow channel, and topsoil or salvaged/amended wetland soil in other areas. The fill will be placed with a bobcat excavator or other similar, appropriate heavy equipment.

7j. For all excavating activities identified in 7h, describe the excavation method, type and amount of material in cubic yards you will remove, and where the material will be disposed. [help]

735 cubic yards of material will be removed from Wetland A, 1,288 cubic yards from Wetland B, 2 cubic yards from Wetland S-D, 455 cubic yards from Wetland S-2, 55 cubic yards in Wetland Mitigation Area 2, and 91 cubic yards in Wetland Mitigation Area 3. The material will be removed in order to re-establish a channel for Padden Creek. The material will be removed using a bobcat excavator.

Part 8–Waterbodies (other than wetlands): Impacts and Mitigation

In Part 8, "waterbodies" refers to non-wetland waterbodies. (See Part 7 for information related to wetlands.) [help]

☒ Check here if there are waterbodies on or adjacent to the project area. (If there are none, skip to Part 9.)

8a. Describe how the project is designed to avoid and minimize adverse impacts to the aquatic environment. [help]

☐ Not applicable

The project will improve overall aquatic functions on site by restoring Padden Creek to a daylighted channel and reconnecting it to its floodplain. The restoration activities will improve fish passage and restore the biological processes of a natural channel that help to improve water quality.

No long-term impacts to waterbodies are anticipated to result from the project. The purpose of the project is to daylight and restore a section of Padden Creek currently flowing through a 2,310-foot-long brick tunnel. The aquatic environment will be significantly improved as a result.

Potential temporary impacts to fish, wildlife, and water quality could occur during construction activities. However, the only portions of the construction that will be within the existing Padden Creek channel are where the new channel will be connected to the existing channel at the upstream and downstream ends of the project. There is also a portion of the project from about Station 1+50 to Station 8+00 that will be partially constructed within the ordinary high water of Tributary 1. No new impervious area will be added as a result of this project. The remainder of the project will be constructed in the dry such that Padden Creek is not impacted during construction.

Potential temporary impacts associated with construction can be reduced or avoided by implementation of the conservation and performance measures outlined below:

Conservation and Performance Measures

General

- A Temporary Erosion and Sediment Control (TESC) Plan will be developed and implemented.
- A qualified Erosion and Control Inspector will review all sediment control measures twice per week during construction. Qualified means the inspector will be a Certified Erosion and Sediment Control Lead (CESCL).
- Turbidity will be monitored per the Turbidity Monitoring Plan.
- A Spill Prevention Control and Countermeasures plan that meets Washington State Department of Ecology (Ecology) standards will be developed and implemented for the project to ensure that all pollutants and products will be controlled and contained.
- Seasonal restrictions applied to work conducted below the ordinary high water mark (OHWM) will be adhered to as required by the Hydraulic Project Approval (HPA) issued by the WDFW, and the Nationwide Permit # 27 issued by the U.S. Army Corps of Engineers (Corps).
- Construction impacts will be confined to the minimum area necessary to complete the project.
- Removal of riparian vegetation will be minimized as much as possible.

Water Quality/Erosion Control

- All BMPs will be installed according to City of Bellingham standards and will be inspected and maintained throughout the life of the project by the CESCL.
- Staging and soil stockpile areas will be limited to those outlined in the plans. See Attachment C, Sheets 21-25.
- Staging areas will be fenced.
- Spill kits will be kept on-site.
- Fuels and other potentially hazardous materials will be kept in a secured area. Secured means fenced and locked during non-work hours.
- Secondary containment will be required for all hazardous materials. Spill containment is required for generators, parked equipment, porta-potties, fuels, solvents, etc.
- The project will comply with water quality conditions identified by Ecology.
- Wash water resulting from wash down of equipment or work areas will be contained for proper treatment and/or disposal, and will not be directly discharged into state waters.
- There will be no discharge of oil, fuels, or chemicals to surface waters, or onto land where there is a potential for re-entry into surface waters.
- No cleaning solvents or chemicals used for tools or equipment cleaning will be discharged to ground or surface waters.
- The contractor will regularly check fuel hoses, oil drums, oil or fuel transfer valves, fittings, etc. for leaks, and will maintain and store materials properly to prevent spills.
- BMPs will be used on all project activities to control and prevent sediments from entering aquatic systems.

In-water and Over-water Work

- All fish will be removed from the work area prior to any in-water work activities per the Fish Removal Plan in the SPIF Appendix A.
- Materials removed from below the OHWM, will be placed in an upland location where they cannot enter waterbodies.
- Materials, such as rock and LWD, placed within the water, will be free of sediment and or other contaminants.
- Water pumped from work isolation areas will be treated to remove suspended sediments prior to returning to the water body. Discharge will occur in such a manner as not to cause erosion.
- Mechanical equipment will not enter the stream channel until the project area has been dewatered and fish salvage has been completed.
- Mechanical equipment operating in the project area will be inspected daily for leaks. Any equipment found to be leaking will immediately be fixed or removed from the project site.

8b. Will your project impact a waterbody or the area around a waterbody? [help]

☒ Yes ☐ No

8c. Have you prepared a mitigation plan to compensate for the project's adverse impacts to non-wetland waterbodies? [help]

- **If Yes**, submit the plan with the JARPA package and answer 8d.
- **If No, or Not applicable,** explain below why a mitigation plan should not be required.

☐ Yes ☒ No ☐ Not applicable

The project is a restoration project in nature and includes compensation for unavoidable wetland and stream impacts associated with restoration activities. The project will restore the biological functions of Padden Creek, resulting in a net benefit of aquatic functions.

8d. Summarize what the mitigation plan is meant to accomplish. Describe how a watershed approach was used to design the plan.

- If you already completed 7g you do not need to restate your answer here. [help]

Not applicable.

8e. Summarize impact(s) to each waterbody in the table below. [help]

Activity (clear, dredge, fill, pile drive, etc.)	Waterbody name[1]	Impact location[2]	Duration of impact[3]	Amount of material (cubic yards) to be placed in or removed from waterbody	Area (sq. ft. or linear ft.) of waterbody directly affected
Ex tunnel headwall and wing wall removal	Padden Creek	In Waterbody	Permanent	20 CY removed and replaced	35 LF
Proposed weir and wing wall installation at ex tunnel outlet	Padden Creek	In Waterbody	Permanent	12 CY removed and replaced	110 SF
Proposed streambed restoration d/s of tunnel outlet	Padden Creek	In Waterbody	Permanent	150 CY removed and replaced	1225 SF
New channel for daylighted Padden Creek	"Tributary 1"	In Waterbody	Permanent	308 CY removed and replaced; 150 CY additional fill	2945 SF

[1] If no official name for the waterbody exists, create a unique name (such as "Stream 1") The name should be consistent with other documents provided.
[2] Indicate whether the impact will occur in or adjacent to the waterbody. If adjacent, provide the distance between the impact and the waterbody and indicate whether the impact will occur within the 100-year flood plain.
[3] Indicate the days, months or years the waterbody will be measurably impacted by the work. Enter "permanent" if applicable.

8f. For all activities identified in 8e, describe the source and nature of the fill material, amount (in cubic yards) you will use, and how and where it will be placed into the waterbody. [help]

Material to be added below ordinary high water in Tributary 1 consists of streambed gravel, cobbles and boulders as well as large woody debris. All materials will be obtained from an approved source and inspected to ensure they meet contract specifications. These materials will be used to construct the new daylighted stream channel. Material to be added below ordinary high water of Padden Creek includes streambed gravel, cobbles and boulders as well as large woody debris. The material will be used to transition and stabilize the existing channel at the transitions to the new daylighted channel. In addition concrete will be used within the ordinary high water mark for Padden Creek at the outlet of the tunnel to construct a fish barrier to prevent fish from entering the tunnel and encourage the fish to use the new Padden Creek channel.

8g. For all excavating or dredging activities identified in 8e, describe the method for excavating or dredging, type and amount of material you will remove, and where the material will be disposed. [help]

Excavated material in Tributary 1 consists of native material which will be removed to create the new daylighted channel. The excavated material in Padden Creek consists of native material to be removed to create the transition between the existing Padden Creek channel and the new daylighted channel. Material removed from Padden Creek also includes portions of the existing tunnel and tunnel wing walls.

Part 9–Additional Information

Any additional information you can provide helps the reviewer(s) understand your project. Complete as much of this section as you can. It is ok if you cannot answer a question.

9a. If you have already worked with any government agencies on this project, list them below. [help]

Agency Name	Contact Name	Phone	Most Recent Date of Contact
Washington Department of Fish and Wildlife	Joel Ingram	(360) 902-2404	October 2012
Washington Department of Ecology	Susan Meyer	(425) 649-7168	April 2013
U.S. Army Corps of Engineers	Randel Perry	(360) 734-3156	April/May 2013

9b. Are any of the wetlands or waterbodies identified in Part 7 or Part 8 of this JARPA on the Washington Department of Ecology's 303(d) List? [help]

- **If Yes,** list the parameter(s) below.
- If you don't know, use Washington Department of Ecology's Water Quality Assessment tools at: http://www.ecy.wa.gov/programs/wq/303d/.

☒ Yes ☐ No

Bacteria, Category 5 – requires a TMDL

9c. What U.S. Geological Survey Hydrological Unit Code (HUC) is the project in? [help]

- Go to http://cfpub.epa.gov/surf/locate/index.cfm to help identify the HUC.

17110004 Nooksack Watershed

9d. What Water Resource Inventory Area Number (WRIA #) is the project in? [help]

- Go to http://www.ecy.wa.gov/services/gis/maps/wria/wria.htm to find the WRIA #.

WRIA 1 Nooksack

9e. Will the in-water construction work comply with the State of Washington water quality standards for turbidity? [help]

- Go to http://www.ecy.wa.gov/programs/wq/swqs/criteria.html for the standards.

☒ Yes ☐ No ☐ Not applicable

9f. If the project is within the jurisdiction of the Shoreline Management Act, what is the local shoreline environment designation? [help]

- If you don't know, contact the local planning department.
- For more information, go to: http://www.ecy.wa.gov/programs/sea/sma/laws_rules/173-26/211_designations.html.

☐ Rural ☐ Urban ☐ Natural ☐ Aquatic ☐ Conservancy ☐ Other_____

9g. What is the Washington Department of Natural Resources Water Type? [help]

- Go to http://www.dnr.wa.gov/BusinessPermits/Topics/ForestPracticesApplications/Pages/fp_watertyping.aspx for the Forest Practices Water Typing System.

☐ Shoreline	☒ Fish	☐ Non-Fish Perennial	☐ Non-Fish Seasonal

9h. Will this project be designed to meet the Washington Department of Ecology's most current stormwater manual? [help]

- **If No**, provide the name of the manual your project is designed to meet.

☒ Yes ☐ No

Name of manual:

9i. Does the project site have known contaminated sediment? [help]

- **If Yes**, please describe below.

☒ Yes ☐ No

Please refer to Attachment D. The contaminated soil will be removed as part of the construction of this project.

9j. If you know what the property was used for in the past, describe below. [help]

Most of the project will occur within the historic Padden Creek alignment. Some of the project property, particularly in the vicinity of 20th and 22nd streets, was previously occupied by single family homes. Refer to Attachment F.

9k. Has a cultural resource (archaeological) survey been performed on the project area? [help]

- **If Yes**, attach it to your JARPA package.

☒ Yes ☐ No Please refer to Attachment E.

9l. Name each species listed under the federal Endangered Species Act that occurs in the vicinity of the project area or might be affected by the proposed work. [help]

Federally listed species that may occur in the vicinity of the project include the following:

Bull trout, Coastal/Puget Sound IRU *(Salvelinus confluentus); threatened*

Chinook salmon, Puget Sound ESU (*Oncorhynchus tshawytscha*) *; threatened*

Steelhead trout, Coastal/Puget Sound DPS (*Oncorhynchus mykiss*) *; threatened*

9m. Name each species or habitat on the Washington Department of Fish and Wildlife's Priority Habitats and Species List that might be affected by the proposed work. [help]

The WDFW Priority Habitat and Species List maps Padden Creek as a priority fish presence creek. Coho Salmon, Fall Chinook, Fall Chum, Resident Cutthroat, and Winter Steelhead could be found within Padden Creek. These fish may be impacted during construction; however, in-water work will occur in the work window to protect listed fish species. Long-term project effects will be beneficial.

No other habitats or species are mapped within the project area. There are two wetlands mapped approximately 0.25 miles southeast of the project area. These wetlands are described as "draining to Bellingham Bay from the east and north." No bald eagle nests or roost sites are mapped within 0.5 miles of project site.

Part 10–SEPA Compliance and Permits

Use the resources and checklist below to identify the permits you are applying for.

- Online Project Questionnaire at http://apps.ecy.wa.gov/opas/.
- Governor's Office of Regulatory Assistance at (800) 917-0043 or help@ora.wa.gov.
- For a list of addresses to send your JARPA to, click on agency addresses for completed JARPA.

10a. Compliance with the State Environmental Policy Act (SEPA). (Check all that apply.) [help]

- For more information about SEPA, go to www.ecy.wa.gov/programs/sea/sepa/e-review.html.

☐ A copy of the SEPA determination or letter of exemption is included with this application.

☒ A SEPA determination is pending with City of Bellingham (lead agency). The expected decision date is November 2013.

☐ I am applying for a Fish Habitat Enhancement Exemption. (Check the box below in 10b.) [help]

☐ This project is exempt (choose type of exemption below).

- ☐ Categorical Exemption. Under what section of the SEPA administrative code (WAC) is it exempt? _____
- ☐ Other: _____

☐ SEPA is pre-empted by federal law.

10b. Indicate the permits you are applying for. (Check all that apply.) [help]

LOCAL GOVERNMENT

Local Government Shoreline permits:

☐ Substantial Development ☐ Conditional Use ☐ Variance

☐ Shoreline Exemption Type (explain):_____

Other city/county permits:

☒ Floodplain Development Permit ☒ Critical Areas Ordinance ☒ Stormwater Permit

STATE GOVERNMENT

Washington Department of Fish and Wildlife:

☒ Hydraulic Project Approval (HPA) ☐ Fish Habitat Enhancement Exemption – Attach Exemption Form

Effective July 10, 2012, you must submit a check for $150 to Washington Department of Fish and Wildlife, unless your project qualifies for an exemption or alternative payment method below. **Do not send cash.**

Check the appropriate boxes:

☒ $150 check enclosed. (Check #_____)
Attach check made payable to Washington Department of Fish and Wildlife.

☐ Charge to billing account under agreement with WDFW. (Agreement #_____)

☐ My project is exempt from the application fee. (Check appropriate exemption)
- ☐ HPA processing is conducted by applicant-funded WDFW staff. (Agreement #_____)
- ☐ Mineral prospecting and mining.
- ☐ Project occurs on farm and agricultural land. (Attach a copy of current land use classification recorded with the county auditor, or other proof of current land use.)
- ☐ Project is a modification of an existing HPA originally applied for, prior to July 10, 2012. (HPA #_____)

Washington Department of Natural Resources:

☐ Aquatic Use Authorization

Complete JARPA Attachment E and submit a check for $25 payable to the Washington Department of Natural Resources. **Do not send cash.**

Washington Department of Ecology:

☒ Section 401 Water Quality Certification

FEDERAL GOVERNMENT

United States Department of the Army permits (U.S. Army Corps of Engineers):

☒ Section 404 (discharges into waters of the U.S.) ☐ Section 10 (work in navigable waters)

United States Coast Guard permits:

☐ General Bridge Act Permit ☐ Private Aids to Navigation (for non-bridge projects)

Part 11–Authorizing Signatures

Signatures are required before submitting the JARPA package. The JARPA package includes the JARPA form, project plans, photos, etc. [help]

11a. Applicant Signature (required) [help]

I certify that to the best of my knowledge and belief, the information provided in this application is true, complete, and accurate. I also certify that I have the authority to carry out the proposed activities, and I agree to start work only after I have received all necessary permits.

I hereby authorize the agent named in Part 3 of this application to act on my behalf in matters related to this application. _____ (initial)

By initialing here, I state that I have the authority to grant access to the property. I also give my consent to the permitting agencies entering the property where the project is located to inspect the project site or any work related to the project. CAM (initial)

Craig Mueller	Craig Mueller	12-17-13
Applicant Printed Name	Applicant Signature	Date

11b. Authorized Agent Signature [help]

I certify that to the best of my knowledge and belief, the information provided in this application is true, complete, and accurate. I also certify that I have the authority to carry out the proposed activities and I agree to start work only after all necessary permits have been issued.

Authorized Agent Printed Name	Authorized Agent Signature	Date

11c. Property Owner Signature (if not applicant). [help]
Not required if project is on existing rights-of-way or easements.

I consent to the permitting agencies entering the property where the project is located to inspect the project site or any work. These inspections shall occur at reasonable times and, if practical, with prior notice to the landowner.

Property Owner Printed Name	Property Owner Signature	Date

18 U.S.C §1001 provides that: Whoever, in any manner within the jurisdiction of any department or agency of the United States knowingly falsifies, conceals, or covers up by any trick, scheme, or device a material fact or makes any false, fictitious, or fraudulent statements or representations or makes or uses any false writing or document knowing same to contain any false, fictitious, or fraudulent statement or entry, shall be fined not more than $10,000 or imprisoned not more than 5 years or both.

If you require this document in another format, contact the Governor's Office of Regulatory Assistance (ORA) at (800) 917-0043.
People with hearing loss can call 711 for Washington Relay Service. People with a speech disability can call (877) 833-6341.
ORA publication number: ENV-019-09 rev. 06-12

WASHINGTON STATE
Joint Aquatic Resources Permit Application (JARPA) [help]

US Army Corps of Engineers
Seattle District

AGENCY USE ONLY

Date received:

Agency reference #: _____

Tax Parcel #(s): _____

_____

_____

TO BE COMPLETED BY APPLICANT [help]

Project Name: Padden Creek Daylighting__

Attachment A:
For additional property owner(s) [help]

Use this attachment only if you have more than one property owner. Complete one attachment for each additional property owner impacted by the project.

Signatures of property owners are not needed for repair or maintenance activities on existing rights-of-way or easements.

Use black or blue ink to enter answers in white spaces below.

1. Name (Last, First, Middle) and Organization (if applicable)			
Blethen, Carolyn			
2. Mailing Address (Street or PO Box)			
1714 22nd Street			
3. City, State, Zip			
Bellingham, WA 98225			
4. Phone (1)	**5.** Phone (2)	**6.** Fax	**7.** E-mail
( )	( )	( )	
Address or tax parcel number of property you own:			
370212503533			
Signature of Property Owner			
I consent to the permitting agencies entering the property where the project is located to inspect the project site or any work. These inspections shall occur at reasonable times and, if practical, with prior notice to the landowner.			
_____ Printed Name		_____ Signature	

EASEMENT IS PENDING. THIS FORM WILL BE COMPLETED AND SIGNED WHEN EASEMENT IS COMPLETE.

If you require this document in another format, contact the Governor's Office for Regulatory Innovation and Assistance (ORIA) at (800) 917-0043. People with hearing loss can call 711 for Washington Relay Service. People with a speech disability can call (877) 833-6341. ORIA publication number: ENV-020-09 rev. 08/2013

WASHINGTON STATE
Joint Aquatic Resources Permit Application (JARPA) [help]

US Army Corps of Engineers
Seattle District

AGENCY USE ONLY

Date received:

Agency reference #: _____

Tax Parcel #(s): _____

_____

_____

TO BE COMPLETED BY APPLICANT [help]

Project Name: Padden Creek Daylighting__

Attachment A:
For additional property owner(s) [help]

Use this attachment only if you have more than one property owner. Complete one attachment for each additional property owner impacted by the project.

Signatures of property owners are not needed for repair or maintenance activities on existing rights-of-way or easements.

Use black or blue ink to enter answers in white spaces below.

1. Name (Last, First, Middle) and Organization (if applicable)			
West, Zachariah S.			
2. Mailing Address (Street or PO Box)			
1209 15th Street			
3. City, State, Zip			
Bellingham WA 98225			
4. Phone (1)	**5.** Phone (2)	**6.** Fax	**7.** E-mail
( )	( )	( )	
Address or tax parcel number of property you own:			
370212492532			
Signature of Property Owner			
I consent to the permitting agencies entering the property where the project is located to inspect the project site or any work. These inspections shall occur at reasonable times and, if practical, with prior notice to the landowner.			
_____ Printed Name		_____ Signature	

If you require this document in another format, contact the Governor's Office for Regulatory Innovation and Assistance (ORIA) at (800) 917-0043. People with hearing loss can call 711 for Washington Relay Service. People with a speech disability can call (877) 833-6341. ORIA publication number: ENV-020-09 rev. 08/2013

WASHINGTON STATE
Joint Aquatic Resources Permit Application (JARPA) [help]

US Army Corps of Engineers
Seattle District

AGENCY USE ONLY

Date received:

Agency reference #: _____

Tax Parcel #(s): _____

_____

_____

Attachment A:
For additional property owner(s) [help]

TO BE COMPLETED BY APPLICANT [help]

Project Name: Padden Creek Daylighting__

Use this attachment only if you have more than one property owner. Complete one attachment for each additional property owner impacted by the project.

Signatures of property owners are not needed for repair or maintenance activities on existing rights-of-way or easements.

Use black or blue ink to enter answers in white spaces below.

1. Name (Last, First, Middle) and Organization (if applicable)			
People's Land Trust			
2. Mailing Address (Street or PO Box)			
PO Box 4002			
3. City, State, Zip			
Bellingham WA 98227			
4. Phone (1)	**5.** Phone (2)	**6.** Fax	**7.** E-mail
( )	( )	( )	
Address or tax parcel number of property you own:			
370212467546			
Signature of Property Owner			
I consent to the permitting agencies entering the property where the project is located to inspect the project site or any work. These inspections shall occur at reasonable times and, if practical, with prior notice to the landowner.			
_____ Printed Name		_____ Signature	

EASEMENT IS PENDING. THIS FORM WILL BE COMPLETED AND SIGNED WHEN EASEMENT IS COMPLETE.

If you require this document in another format, contact the Governor's Office for Regulatory Innovation and Assistance (ORIA) at (800) 917-0043. People with hearing loss can call 711 for Washington Relay Service. People with a speech disability can call (877) 833-6341. ORIA publication number: ENV-020-09 rev. 08/2013

WASHINGTON STATE
Joint Aquatic Resources Permit Application (JARPA) [help]

US Army Corps of Engineers
Seattle District

AGENCY USE ONLY

Date received:

Agency reference #: _____

Tax Parcel #(s): _____

_____

_____

TO BE COMPLETED BY APPLICANT [help]

Project Name: Padden Creek Daylighting__

Attachment A:
For additional property owner(s) [help]

Use this attachment only if you have more than one property owner. Complete one attachment for each additional property owner impacted by the project.

Signatures of property owners are not needed for repair or maintenance activities on existing rights-of-way or easements.

Use black or blue ink to enter answers in white spaces below.

1. Name (Last, First, Middle) and Organization (if applicable)			
Washington Department of Transportation Right-of-Way			
2. Mailing Address (Street or PO Box)			
3. City, State, Zip			
4. Phone (1)	**5.** Phone (2)	**6.** Fax	**7.** E-mail
( )	( )	( )	
Address or tax parcel number of property you own:			

Signature of Property Owner

I consent to the permitting agencies entering the property where the project is located to inspect the project site or any work. These inspections shall occur at reasonable times and, if practical, with prior notice to the landowner.

_____ _____

Printed Name Signature

If you require this document in another format, contact the Governor's Office for Regulatory Innovation and Assistance (ORIA) at (800) 917-0043. People with hearing loss can call 711 for Washington Relay Service. People with a speech disability can call (877) 833-6341. ORIA publication number: ENV-020-09 rev. 08/2013

WASHINGTON STATE
Joint Aquatic Resources Permit Application (JARPA) [help]

US Army Corps of Engineers
Seattle District

AGENCY USE ONLY

Date received:

Agency reference #: _____

Tax Parcel #(s): _____

_____

_____

Attachment A:
For additional property owner(s) [help]

TO BE COMPLETED BY APPLICANT [help]

Project Name: Padden Creek Daylighting__

Use this attachment only if you have more than one property owner. Complete one attachment for each additional property owner impacted by the project.

Signatures of property owners are not needed for repair or maintenance activities on existing rights-of-way or easements.

Use black or blue ink to enter answers in white spaces below.

1. Name (Last, First, Middle) and Organization (if applicable)			
Padden Creek Associates, LLC			
2. Mailing Address (Street or PO Box)			
1326 Fifth Ave #711			
3. City, State, Zip			
Seattle, WA 98225			
4. Phone (1)	**5.** Phone (2)	**6.** Fax	**7.** E-mail
( )	( )	( )	
Address or tax parcel number of property you own:			
370212420507			
Signature of Property Owner			
I consent to the permitting agencies entering the property where the project is located to inspect the project site or any work. These inspections shall occur at reasonable times and, if practical, with prior notice to the landowner.			
_____ Printed Name		_____ Signature	

EASEMENT IS PENDING. THIS FORM WILL BE COMPLETED AND SIGNED WHEN EASEMENT IS COMPLETE.

If you require this document in another format, contact the Governor's Office for Regulatory Innovation and Assistance (ORIA) at (800) 917-0043. People with hearing loss can call 711 for Washington Relay Service. People with a speech disability can call (877) 833-6341. ORIA publication number: ENV-020-09 rev. 08/2013

WASHINGTON STATE
Joint Aquatic Resources Permit Application (JARPA) [help]

US Army Corps of Engineers
Seattle District

AGENCY USE ONLY

Date received:

Agency reference #: _____

Tax Parcel #(s): _____

TO BE COMPLETED BY APPLICANT [help]

Project Name: Padden Creek Daylighting

Attachment A:
For additional property owner(s) [help]

Use this attachment only if you have more than one property owner. Complete one attachment for each additional property owner impacted by the project.

Signatures of property owners are not needed for repair or maintenance activities on existing rights-of-way or easements.

Use black or blue ink to enter answers in white spaces below.

1. Name (Last, First, Middle) and Organization (if applicable)			
PMC Properties, LLC			
2. Mailing Address (Street or PO Box)			
842 Wiser Lake Road			
3. City, State, Zip			
Lynden, WA 98264			
4. Phone (1)	**5.** Phone (2)	**6.** Fax	**7.** E-mail
( )	( )	( )	
Address or tax parcel number of property you own:			
370212416537			
Signature of Property Owner			
I consent to the permitting agencies entering the property where the project is located to inspect the project site or any work. These inspections shall occur at reasonable times and, if practical, with prior notice to the landowner.			
Printed Name		Signature	

EASEMENT IS PENDING. THIS FORM WILL BE COMPLETED AND SIGNED WHEN EASEMENT IS COMPLETE.

If you require this document in another format, contact the Governor's Office for Regulatory Innovation and Assistance (ORIA) at (800) 917-0043. People with hearing loss can call 711 for Washington Relay Service. People with a speech disability can call (877) 833-6341. ORIA publication number: ENV-020-09 rev. 08/2013

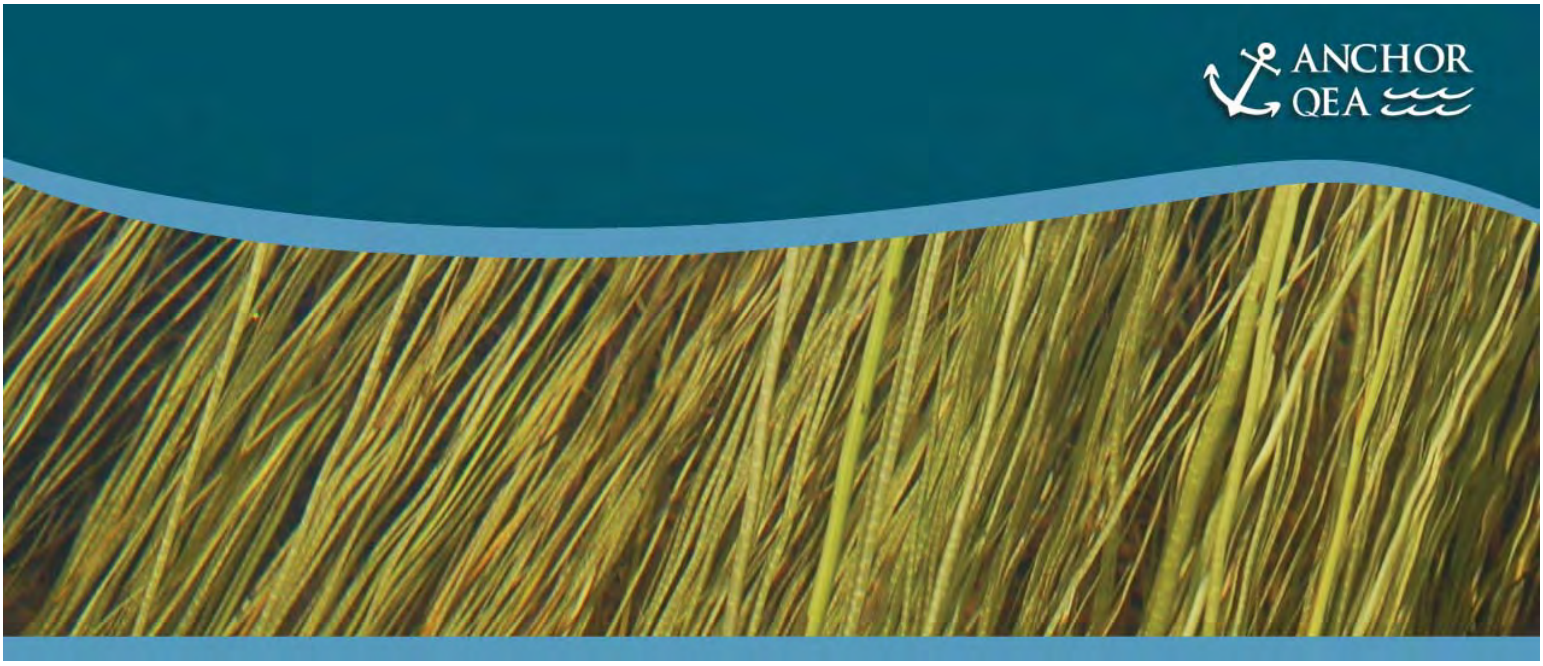

WETLAND AND STREAM OHWM DELINEATION REPORT
PADDEN CREEK DAYLIGHTING PROJECT

Prepared for

SAIC Energy, Environment & Infrastructure, LLC

R.W. Beck

Prepared by

Anchor QEA, LLC

August 2012

WETLAND AND STREAM OHWM DELINEATION REPORT
PADDEN CREEK DAYLIGHTING PROJECT

Prepared for

SAIC Energy, Environment & Infrastructure, LLC
R.W. Beck
1001 Fourth Avenue
Suite 2500
Seattle, Washington 98154

Prepared by

Anchor QEA, LLC
1605 Cornwall Avenue
Bellingham, Washington 98225

August 2012

TABLE OF CONTENTS

1 INTRODUCTION 1
1.1 Review of Existing Information 2
2 STUDY AREA DESCRIPTION 4
2.1 Topography 4
2.2 Soils 4
2.3 Hydrology 5
2.4 Plant Communities 5
3 WETLAND DELINEATION 6
3.1 Wetland Delineation Methods 6
3.1.1 Vegetation 8
3.1.2 Soils 8
3.1.3 Hydrology 9
3.1.4 Other Data Sources 9
3.1.5 Wetland Classifications 9
3.1.6 Wetland Ratings 10
3.1.7 Wetland Functions Assessment 11
3.2 Wetland Delineation Results 11
3.2.1 Wetland A 11
3.2.2 Wetland B 13
3.3 Supplemental Wetlands S-2 and S-D 14
3.4 Regulatory Framework 14
3.4.1 USFWS Classification 14
3.4.2 Ecology Rating, Classification, and Functions and Values Scores 15
3.4.3 Bellingham Wetland Classification Guidance 17
3.4.4 Wetland Delineation and Typing Limitations 18
4 STREAM AND OHWM DELINEATION 19
4.1 OHWM Delineation Methods 19
4.1.1 Water Typing System Criteria 19
4.2 Results 20
4.2.1 Padden Creek and Unnamed Tributary to Padden Creek 20

5 REFERENCES 23

List of Tables

Table 1 Wetland Plant Indicator Definitions 8
Table 2 USFWS Wetland Classifications and Connections to Surface Water 15
Table 3 Summary of Wetland Classes and Rating Scores Using Ecology Wetlands Rating System 16
Table 4 Summary of Functions and Values Wetland Rating Scores 16
Table 5 BMC Wetland Rating and Standard Buffer Distance 17
Table 6 City of Bellingham Stream Classification and Standard Buffer Distance 22

List of Figures

Figure 1 Vicinity Map
Figure 2 Aerial Photograph of Study Area
Figure 3 Soil Units
Figure 4 National Wetland Inventory
Figure 5 Wetland and OHWM Overview Map
Figure 6A Wetlands A and B Delineation
Figure 6B Supplemental Wetlands S-2 and S-D Delineation
Figure 7 Eastern Reach of Padden Creek
Figure 8 Western Reach of Padden Creek
Figure 9 Unnamed Tributary of Padden Creek

List of Appendices

Appendix A Photographs
Appendix B Sample Plot Summary Data
Appendix C Field Data Sheets
Appendix D Ecology Wetland Rating Forms

1 INTRODUCTION

On February 13 and 14, 2012, Anchor QEA, LLC performed a wetland and stream ordinary high water mark (OHWM) delineation within an approximately 7.3-acre study area in the City of Bellingham (City), Whatcom County, Washington (Township 37 North, Range 2 East, Section 12). A vicinity map is shown on Figure 1. An aerial photograph of the study area is shown on Figure 2.

This report is intended to document critical areas in the study area by providing information regarding the presence of wetlands and streams within the study area, as defined in the City of Bellingham Municipal Code (BMC) Critical Areas Chapter 16.55 (City of Bellingham 2012). The documented wetland and stream OHWM boundaries provided in this report are expected to serve as a baseline condition for the proposed Padden Creek Daylighting Project (project).

The City of Bellingham Parks and Recreation Department (Parks) proposes to restore a section of Padden Creek to reestablish fish passage, improve riparian habitat and water quality, and reduce flooding. A section of Padden Creek is currently enclosed within a 2,200-foot-long, continuous, underground brick tunnel between 17th Street and 22nd Street. The tunnel, built in the 1890s, presents a fish passage barrier that prevents fish, especially Endangered Species Act (ESA)-listed salmon, from reaching important spawning and rearing habitat further upstream. It has also altered the creek's natural floodplain leading to widespread flooding of the adjacent neighborhood, which has been amplified by debris clogging the tunnel during storm events. The tunnel also contributes to the degradation of the creek's water quality by eliminating natural riparian buffers, the stream's interconnection to interflow and groundwater, and the stream's natural morphology and biological integrity.

The proposed project will restore fish passage to upstream fish habitat and create suitable stream habitat by forming a natural creek channel that includes pools and riffles, and by placing stream substrates and large woody debris (LWD). Permanent native vegetated riparian buffers will be established to protect the creek, increase evapotranspiration, treat

stormwater runoff entering the creek, and provide shade and a source a leaf litter to benefit salmon habitat and help remove pollutants.

The project will re-establish infiltration and groundwater recharging of the creek, which will further improve water quality and lower temperatures. The daylighting and restoration of Padden Creek also provides the opportunity for water quality treatment of inflow from storm drains that discharge to the creek using low impact development, as feasible. Furthermore, the daylighting will help alleviate upstream flooding for up to 159 residential structures, and will increase community awareness of the creek through education and outreach programs, which may result in further water quality benefits beyond the project boundaries.

The approximately 7.3-acre study area includes the exposed reaches of Padden Creek at the west (downstream) and east (upstream) ends of the 2200-foot-long tunneled portion of the creek and the aboveground area above the tunnel (see Figure 2). Land use within the study area consists of Fairhaven Park, residential properties, and public roads and right-of-ways. Two wetlands and the two exposed reaches of the Padden Creek stream channel were delineated within the study area.

This report describes the methods used in the field investigation and Anchor QEA's findings. Section 2 includes a description of the study area, and Section 3 includes summaries of the findings of the wetland delineation. Section 4 gives summaries of the findings of the stream OHWM delineations. Photographs of critical areas identified during the investigation are included as Appendix A. A summary of data collected at each sampling plot during the wetland delineation is presented in tables in Appendix B and in the field data forms in Appendix C. Finally, Washington State Department of Ecology (Ecology) Wetland Rating Forms are included in Appendix D.

1.1 Review of Existing Information

As part of the analysis to identify natural resources and critical areas in the study area, Anchor QEA ecologists reviewed the following sources of information to support field observations:

- *Natural Resource Conservation Service (NRCS) Web Soil Survey* (USDA 2012a)

- *Soil Survey of Whatcom County, Washington* (USDA 1992)
- *Hydric Soil List for Washington State* (USDA 2012b)
- *United States Fish and Wildlife Service (USFWS) Wetlands Mapper for National Wetlands Inventory (NWI) Map Information* (USFWS 2012)
- BMC (City of Bellingham 2012)
- *WSDOT Draft SR 11 Padden Creek Fish Barrier Removal Project Wetland Delineation Data* (WSDOT 2011)
- *Revised Wetland Delineation for Parkway Gardens, Bellingham, Washington* (NES 2008)
- Personal communication with the U.S. Army Corps of Engineers (USACE; Perry pers. comm. 2012)
- Aerial photographs

2 STUDY AREA DESCRIPTION

The study area is located in the City of Bellingham, Whatcom County, Washington (Township 37 North, Range 2 East, Section 12). The approximately 7.3-acre study area includes Fairhaven Park, public roads and right-of-ways, and residential properties. Old Fairhaven Parkway bisects the study area. The west portion of the study area, and south side of Old Fairhaven Parkway, includes Fairhaven Park. The middle and east portion of the study area is located north of Old Fairhaven Parkway. This area includes single-family home residential property with some undeveloped lots. Padden Creek is an open channel at the east and west ends of the study area and is piped underground through the middle of the study area. Land use in the vicinity of the study area includes Fairhaven Park and residential development. An aerial photograph of the study area is shown on Figure 2.

2.1 Topography

Overall, the topography of the study area is relatively level within the residential property and public roads. Hills and slopes are located in the area of Fairhaven Park and in the exposed channel reaches of Padden Creek.

2.2 Soils

The *NRCS Web Soil Survey* (USDA 2012a) identifies two soil series in the location of the study area: Urban Land Whatcom Labounty complex, 0 to 8 percent slopes; and Everett Urban Land complex, 5 to 20 percent slopes. The Urban Land Whatcom Labounty complex soils comprise about 90 percent of the soil series within the study area. These soils are not classified as hydric soils according to *Hydric Soil List for Washington State* (USDA 2012b). Figure 3 shows the soil series in the study area.

Sample plot soil profiles are described in Section 3.2. A summary of soil data collected at each sample plot is presented in the tables in Appendix B and in the field data forms in Appendix C.

2.3 Hydrology

The study area is located in the Nooksack Basin Water Resource Inventory Area (WRIA) 1 Ecology 2012). Hydrologic characteristics in the study area are influenced by regional groundwater, direct precipitation, surface water runoff, and Padden Creek. Padden Creek and wetlands in the study area receive runoff from impervious surfaces associated with roads, parking lots, and development within and near the study area. The OHWM of the exposed east and west reaches of Padden Creek within the study area was delineated as part of the investigation and is described in Section 4 of this report. Padden Creek is an open channel at the east and west ends of the study area and is piped underground through the middle of the study area.

Sample plot hydrology is described in Section 3.1.3. A summary of hydrology data collected at each sampling plot is presented in the tables in Appendix B and in the field data forms in Appendix C.

2.4 Plant Communities

The *USFWS Wetlands Mapper for NWI Map Information* does not identify any wetland habitat within the study area (see Figure 4). As described in Section 3, two wetlands were delineated in the study area during the investigation. Wetland vegetation community types identified during the delineation include palustrine forested (PFO), palustrine scrub-shrub (PSS), and palustrine emergent (PEM) wetland systems. Vegetation within the study area includes native and nonnative tree, shrub, grass, and herbaceous species associated with upland and wetland habitat. Wetland and upland vegetation in the study area is described in Section 3.1.1. A summary of vegetation data collected in the study area and at each sampling plot is presented in the tables in Appendix B and in the field data forms in Appendix C.

3 WETLAND DELINEATION

On February 13 and 14, 2012, Anchor QEA ecologists performed a wetland delineation and wetland rating analysis of wetland habitat in the study area. Two wetlands (Wetlands A and B) were identified and delineated within the study area. Complete descriptions of Wetlands A and B are provided in Section 3.2.

In addition to Wetlands A and B delineated by Anchor QEA, two wetlands are located within the parcel on the northwest corner of the intersection of Old Fairhaven Parkway and 20th Street. These two wetlands were previously delineated as part of two other projects, independent of the project associated with this report. Information on these two wetlands is incorporated into this report based on the wetland delineation results described in their respective project documents. The wetlands are identified as Wetland 2 and Wetland D in their respective documents. To distinguish between the Anchor QEA wetland delineations, while maintaining wetland naming consistency with the supplemental wetland report information, these wetlands are identified as Supplemental Wetland 2 (Wetland S-2) and Supplemental Wetland D (Wetland S-D). Wetland S-2 was delineated as part of the WSDOT SR 11 Padden Creek Fish Barrier Removal Project (WSDOT 2011) and Wetland S-D was delineated as part of the Parkway Gardens Project (NES 2008). USACE also provided information on the current status of these projects and the associated wetlands (Perry pers. comm. 2012). A summary of Wetlands S-2 and S-D is provided in Section 3.3.

3.1 Wetland Delineation Methods

This section describes the methodology used to perform the wetland delineation, including the review of existing information and field investigation procedures. These methods are consistent with current federal and state agency requirements, as well as local jurisdiction requirements, for performing wetland delineations and identifying protective wetland buffer widths.

As specified by the BMC (City of Bellingham 2012), this wetland delineation was conducted according to the methods defined in the *U.S. Army Corps of Engineers Wetland Delineation Manual* (Environmental Laboratory 1987), the *Regional Supplement to the Corps of Engineers Wetland Delineation Manual: Western Mountains, Valleys, and Coast Region*

(Corps 2010), and Ecology's *Washington State Wetland Identification and Delineation Manual* (Ecology 1997). Soil colors were classified by their numerical description, as identified on a Munsell Soil Color Chart (Munsell 1994). USACE (Environmental Laboratory 1987), the Washington State Shoreline Management Act (SMA; Ecology 2009), the Washington State Growth Management Act (GMA; Access Washington 2009), and the BMC all define wetlands as: "those areas that are inundated or saturated by surface or groundwater at a frequency and duration sufficient to support, and that under normal circumstances do support, a prevalence of vegetation typically adapted for life in saturated soil conditions. Wetlands generally include swamps, marshes, bogs, and similar areas."

The method for delineating wetlands is based on the presence of three parameters: hydrophytic vegetation, hydric soils, and wetland hydrology. Hydrophytic vegetation is "the macrophytic plant life that occurs in areas where the frequency and duration of inundation or soil saturation produce permanently or periodically saturated soils of sufficient duration to exert a controlling influence on the plant species present." Hydric soils are "formed under conditions of saturation, flooding, or ponding long enough during the growing season to develop anaerobic conditions in the upper part." Wetland hydrology "encompasses all hydrologic characteristics of areas that are periodically inundated or have soils saturated to the surface for a sufficient duration during the growing season" (Ecology 1997). Data collection methods for each of these parameters are described below.

A total of 6 data plots were sampled at the approximately 7.3-acre study area (see Figure 2). Sample plots are identified numerically as wetland or upland plots (for example, SP1Wet, SP2Up, SP3Wet, etc.). Information on vegetation, soils, and hydrology was collected at each of the plots and recorded on field data sheets. Site photographs are presented in Appendix A, a summary of sample plot data is presented in Appendix B, and field data sheets are provided in Appendix C. Wetland boundaries were determined based upon plot data and visual observations of each wetland. Each wetland boundary was flagged and subsequently surveyed by a professional surveyor to establish and verify the wetland's size.

3.1.1 Vegetation

Plant species occurring in each plot were recorded on field data sheets, with one data sheet per plot (see Appendix C). Percent cover was estimated in the plot for each plant species, and dominant species were determined. At each plot, trees within a 30-foot radius, shrubs within a 15-foot radius, and emergents within a 3-foot radius from the center of the plot were identified and recorded on a data sheet. A plant indicator status, designated by the USFWS (Reed 1988, 1993), was assigned to each species, and a determination was made as to whether the vegetation in the plot was hydrophytic. To meet the hydrophytic parameter, more than 50 percent of the dominant species, with 20 percent or greater cover, must have an indicator of obligate wetland (OBL), facultative wetland (FACW), or facultative (FAC). Table 1 shows the wetland indicator status categories.

Table 1
Wetland Plant Indicator Definitions

Indicator Status	Description
Obligate wetland (OBL)	Plant species occur almost always in wetlands (estimated probability greater than 99 percent) under natural conditions.
Facultative wetland (FACW)	Plant species usually occur in wetlands (estimated probability 67 to 99 percent), but occasionally found in non-wetlands.
Facultative (FAC)	Plant species equally likely to occur in wetlands or non-wetlands (estimated probability 34 to 66 percent).
Facultative upland (FACU)	Plant species usually occur in non-wetlands (estimated probability 67 to 99 percent), but occasionally found in wetlands.
Obligate upland (UPL)	Plant species occur almost always in non-wetlands (estimated probability greater than 99 percent) under natural conditions.

3.1.2 Soils

Soils were sampled in each plot and evaluated for hydric soil indicators. Soil pits were dug to a depth of 16 inches or greater. Hydric soil indicators include low soil matrix chroma, gleying, and redoximorphic (or "redox") features. Redox features are spots of contrasting color occurring within the soil matrix (the predominant soil color). Gleyed soils are predominantly bluish, greenish, or grayish in color. Soils having a chroma of 2 (with redox features) or less (with or without redox features) are positive indicators of hydric soils (Environmental Laboratory 1987; Corps 2010).

3.1.3 Hydrology

Wetland hydrology was evaluated at each plot to determine whether it "encompasses all hydrologic characteristics of areas that are periodically inundated or have soils saturated to the surface for a sufficient duration during the growing season" (Ecology 1997). The mesic growing season in western Washington is generally March through October. Field observations of saturation and inundation, and other indicators of wetland hydrology, such as water-stained leaves and drainage patterns in wetlands, were recorded.

3.1.4 Other Data Sources

Reviews of existing information were conducted to identify potential wetlands or site characteristics indicative of wetlands in the study area. The sources of information reviewed to support field observations are identified in Section 1.1.

3.1.5 Wetland Classifications

Wetland community types will be discussed according to the USFWS classification developed by Cowardin et al. (1979) for use in the NWI. This system, published in 1979 by a team of USFWS scientists led by L.M. Cowardin, bases the classification of wetlands on their physical characteristics, such as the general type of vegetation in the wetland (trees, shrubs, grass, etc.) and how much, and where, water is present in the wetland. The Cowardin classification system provides a classification for every known wetland type that occurs throughout the United States and, under this system, a wetland can be classified as having one or more wetland classification types. The community types found during this investigation were:

- Palustrine forested (PFO) – These wetlands have at least 30 percent cover of woody vegetation that is more than 20 feet high.
- Palustrine scrub-shrub (PSS) – These wetlands have at least 30 percent cover of woody vegetation that is less than 20 feet high.
- Palustrine emergent (PEM) – These wetlands have erect, rooted, herbaceous vegetation present for most of the growing season in most years.

3.1.6 Wetland Ratings

Wetland ratings were determined using the most current version of Ecology guidance in *Washington State Wetlands Rating System – Western Washington: Revised* (Ecology 2004) and *Washington State Wetland Rating Form – Western Washington, Version 2* (Ecology 2008), and according to the City's wetland rating criteria, as defined in the BMC (City of Bellingham 2012).

The Ecology system was developed to differentiate wetlands based on their sensitivity to disturbance, their significance in the watershed, their rarity, our ability to replace them, and the beneficial functions they provide to society. The Ecology rating system requires the user to collect specific information about the wetland in a step-by-step process. Three major functions are analyzed: water quality improvement, flood and erosion control, and wildlife habitat. Ratings are based on a point system where points are given if a wetland meets specific criteria related to the wetland's potential and the opportunity to provide certain benefits.

Per Ecology's rating system, wetlands are categorized according to the following criteria and on points given:

- Category I wetlands (70 to 100 points) represent a unique or rare wetland type, or are more sensitive to disturbance, or are relatively undisturbed and contain ecological attributes that are impossible to replace within a human lifetime.
- Category II wetlands (51 to 69 points) are difficult, though not impossible, to replace, and provide high levels of some functions.
- Category III (30 to 50 points) wetlands have moderate levels of functions. They have been disturbed in some ways, and are often less diverse or more isolated from other natural resources in the landscape than Category II wetlands.
- Category IV wetlands (0 to 29 points) have the lowest levels of functions and are often heavily disturbed.

The BMC Chapter 16.55 Critical Areas (City of Bellingham 2012) classifies wetlands into four categories (Category I, Category II, Category III, and Category IV) based on Ecology's

Washington State Wetlands Rating System – Western Washington: Revised (Ecology 2004), as described above.

3.1.7 Wetland Functions Assessment

The functional values of wetlands were rated according to *Washington State Wetland Rating System – Western Washington: Revised* (Ecology 2004) and *Washington State Wetland Rating Form – Western Washington, Version 2* (Ecology 2008). Using Ecology's system, wetlands were rated based on a point system where points are awarded to three functional value categories: water quality, hydrologic, and wildlife habitat. Detailed scoring, based on Ecology wetland rating forms, is provided in Appendix D.

3.2 Wetland Delineation Results

Two wetlands, Wetlands A and B, were found in the study area. Wetland habitats include depressional, riverine, and slope wetlands. The entire boundaries of Wetlands A and B were delineated and surveyed during the investigation (see Figures 5 and 6A). Photographs of Wetlands A and B are presented in Appendix A. A summary of vegetation, soils, and hydrology data collected at each sample plot is presented in the tables in Appendix B and in the field data forms in Appendix C.

As described in the introduction to Section 3, Wetlands S-2 and S-D located within the parcel on the northwest corner of the intersection of Old Fairhaven Parkway and 20th Street were previously delineated as part of the WSDOT SR 11 Padden Creek Fish Barrier Removal Project (WSDOT 2011) and the Parkway Gardens Project (NES 2008). A summary of Wetlands S-2 and S-D is provided in Section 3.3 and the wetlands are shown on Figure 6B.

3.2.1 Wetland A

Wetland A is an approximately 0.17-acre (7,230-square-foot [sf]) wetland associated with a Padden Creek tributary containing PFO, PSS, and PEM habitat (see Figures 5 and 6A). Wetland A has depressional, riverine, and slope wetland classes. The entire boundary of Wetland A was delineated within the study area. An unnamed tributary to Padden Creek flows through Wetland A. The OHWM of the tributary was delineated as described in Section 4. Wetland vegetation is dominated by red alder (*Alnus rubra*), salmonberry (*Rubus*

spectabilis), Douglas spirea (*Spiraea douglasii*), slough sedge (*Carex obnupta*), giant horsetail (*Equisetum telmateia*), lady fern (*Athyrium filix-femina*), and creeping buttercup (*Ranunculus repens*).

Dominant buffer vegetation in Wetland A includes red alder, salmonberry, beaked hazelnut (*Corylus cornuta*), Indian plum (*Oemleria cerasiformis*), and sword fern (*Polystichum munitum*), and the nonnative invasive species Himalayan blackberry (*Rubus armeniacus*) and English ivy (*Hedera helix*). Himalayan blackberry extends into Wetland A in several locations but is generally rooted outside the wetland boundary.

As described in Section 4, the unnamed tributary to Padden Creek flows into Wetland A from a culvert (about 12 inches in diameter) at the southeast corner of the wetland (see Appendix A, Photograph 3). The source of flow from the culvert was not identified during the investigation. However, residential development is located in the direction of the culvert, so the flow appears to be piped until at least the east side of the development.

Soils typically consisted of dark gray clay loam with dark red to light yellowish brown redox features. Soils in the upland plots were typically dark grayish brown clay loam with gravel with no redox features within 18 inches of the surface.

In the Wetland A sample plots, soil saturation was at the surface with the water table typically within about 8 to 11 inches of the surface. Overall, during the investigation, the majority of Wetland A was saturated with the water table within 11 inches of the surface. In the upland plots, saturation was absent below 18 inches from the surface.

Data were collected at four sample plots: SP1Wet, SP2Up, SP3Wet, and SP4Up (Appendices B and C). The two wetland plots (SP1Wet and SP3Wet) contained indicators of hydrophytic vegetation, wetland hydrology, and hydric soils. The upland plots (SP2Up and SP4Up) lacked indicators of wetland hydrology, hydric soils, and hydrophytic vegetation. Twenty-four flags were used to identify the boundary of Wetland A.

3.2.2 Wetland B

Wetland B is an approximately 0.20-acre (8,890-sf) wetland containing PFO, PSS, and PEM habitat (see Figures 5 and 6A). This wetland is classified as depressional. Wetland B vegetation is dominated by red alder, Pacific willow (*Salix lasiandra*), Douglas spirea, creeping buttercup, and field horsetail (*Equisetum arvense*).

Dominant buffer vegetation in Wetland B includes western red cedar (*Thuja plicata*), red alder, beaked hazelnut, Indian plum, sword fern, and trailing blackberry (*Rubus ursinus*) and the nonnative invasive species Himalayan blackberry, holly (*Ilex aquifolium*), and English ivy.

At the time of the delineation, surface runoff was flowing into Wetland B from two culverts located at the west end of the wetland. There is a hydrologic connection between Wetland B and Wetland A via two small culverts (about 10 inches in diameter) beneath a walkway that is part of the park trail system (see Appendix A, Photograph 5). However, at the time of the delineation, there was no flow through the culverts, so the hydrologic connection appears to be intermittent. Likewise, during the time of the delineation, there was no hydrologic connection between Wetland B and the unnamed tributary to Padden Creek associated with Wetland A.

Soils typically consisted of dark gray clay loam with gravel with light yellowish brown redox features. Soils in the upland plot were dark grayish brown clay loam with no redox features within 18 inches of the surface.

In the Wetland B sample plots, soil saturation was at the surface with the water table typically at the surface or within a few inches of the surface. In the upland plots, saturation was absent below 18 inches from the surface.

Data were collected at two sample plots: SP5Wet and SP6Up (Appendices B and C). The wetland plot (SP5Wet) contained indicators of hydrophytic vegetation, wetland hydrology, and hydric soils. The upland plot (SP6Up) lacked indicators of wetland hydrology, hydric soils, and hydrophytic vegetation. Twenty-two flags were used to identify the boundary of Wetland B.

3.3 Supplemental Wetlands S-2 and S-D

Summary information on Wetlands S-2 and S-D is based on the wetland delineation results described in their respective documents (WSDOT 2011; NES 2008).

Wetland S-2 is an approximately 0.58-acre (2,570-sf) wetland containing PFO and PEM habitat (see Figures 5 and 6B). This wetland is classified as depressional (WSDOT 2011; Perry pers. comm. 2012). Wetland S-2 is associated with a ditch adjacent to Old Fairhaven Parkway.

Wetland S-D is an approximately 0.01-acre (560-sf) wetland containing PEM habitat (see Figures 5 and 6B). This wetland is classified as slope (NES 2008; Perry pers. comm. 2012). Wetland S-D is associated with a ditch adjacent to 20th Street.

3.4 Regulatory Framework

Guidance from USFWS, Ecology, and the City was used to determine wetland classifications. Information and excerpts from the specific guidance language are provided in the following sections.

3.4.1 USFWS Classification

The wetlands identified in the study area have been classified using the system developed by Cowardin et al. (1979) for use in the NWI. Table 2 lists the USFWS classifications for the wetlands and their connections to surface waters.

Table 2

USFWS Wetland Classifications and Connections to Surface Water

Wetland	USFWS Classification	Connection to Surface Water
Wetland A	PFO, PSS, and PEM	Unnamed tributary to Padden Creek
Wetland B	PFO, PSS, and PEM	Two 10-inch culverts beneath a walkway connect Wetlands A and B with intermittent surface water connection. No surface water connection occurred between the two wetlands at the time of the delineation.
Wetland S-2[1]	PFO and PEM	Associated with a ditch that drains to culverts
Wetland S-D[1]	PEM	Associated with a ditch that drains to culverts

Notes:
1 Based on supplemental wetland information (WSDOT 2011; NES 2008; Perry pers. comm. 2012)
PFO Palustrine forested
PSS Palustrine scrub-shrub
PEM Palustrine emergent

3.4.2 Ecology Rating, Classification, and Functions and Values Scores

According to the BMC Chapter 16.55 Critical Areas (City of Bellingham 2012), wetland ratings are determined using Ecology's *Washington State Wetlands Rating System – Western Washington: Revised* (Ecology 2004) and *Washington State Wetland Rating Form – Western Washington, Version 2* (Ecology 2008). Under the Ecology system, Wetland A is rated as a Category III wetland and Wetland B is rated as a Category II wetland. Wetland S-2 is rated as a Category II wetland (WSDOT 2011) and Wetland S-D is rated as a Category III wetland (NES 2008).

As described in Section 3.2, Wetland A has multiple hydrogeomorphic classifications. The Ecology system defines which hydrogeomorphic classification to use in the rating process when multiple hydrogeomorphic classifications are present. Table 3 lists the Ecology and local (City) wetland ratings and classifications. Water quality, hydrologic, and habitat functional values for Wetlands A and B are shown in Table 4. A summary of the wetland rating scores and the Ecology Wetland Rating forms are included in Appendix D. Tables 3 and 4 also provide supplemental wetland information for Wetlands S-2 and S-D.

Table 3

Summary of Wetland Classes and Rating Scores Using Ecology Wetlands Rating System

Wetland	Area (acres)	Hydrogeomorphic Classifications	Hydrogeomorphic Classification Used for Rating	State Rating (Ecology)	Local Rating (City of Bellingham)
Wetland A	0.17	Depressional, Riverine, and Slope	Depressional	III	III
Wetland B	0.20	Depressional	Depressional	II	II
Wetland S-2[1]	0.58	Depressional	Depressional	II	II
Wetland S-D[1]	0.01	Slope	Slope	III	III

1 Based on supplemental wetland information (WSDOT 2011; NES 2008; Perry pers. comm. 2012)

Table 4

Summary of Functions and Values Wetland Rating Scores

Wetland	Water Quality Functions Potential Score	Water Quality Opportunity (Yes/No)	Hydrologic Functions Potential Score	Hydrologic Functions Opportunity (Yes/No)	Habitat Functions Potential Score	Habitat Functions Opportunity Score	Total Functions Score[1]
Depressional Total Max. Score	**16**	**No = 1 Yes = 2**	**16**	**No = 1 Yes = 2**	**18**	**18**	**100**
Wetland A	16	Yes	6	Yes	11	11	43
Wetland B	22	Yes	14	Yes	10	10	57
Wetland S-D[2]	9	Yes	0	Yes	3	10	31
Slope Total Max. Score	**12**	**No = 1 Yes = 2**	**8**	**No = 1 Yes = 2**	**18**	**18**	**76**
Wetland S-2[2]	9	Yes	8	Yes	9	9	52

Notes:

1 Calculated as (Water Quality Functions Potential Score times Water Quality Opportunity Score) plus (Hydrologic Functions Potential Score times Hydrologic Functions Opportunity Score) plus Habitat Functions Potential Score plus Habitat Functions Opportunity Score

2 Based on supplemental wetland information (WSDOT 2011; NES 2008; Perry pers. comm. 2012)

3.4.3 Bellingham Wetland Classification Guidance

Wetlands were rated according to City's wetland rating criteria in the BMC (City of Bellingham 2012). The City classifies wetlands into four categories (Category I, Category II, Category III, and Category IV) based on the *Washington State Wetlands Rating System – Western Washington: Revised* (Ecology 2004). Therefore, the wetland ratings under the City's classifications are the same as the Ecology wetland ratings, as identified in Table 3.

Appropriate minimum wetland buffers have been identified according to the current BMC (City of Bellingham 2012). The BMC Chapter 16.55 Critical Areas section identifies minimum protective buffer widths based on the wetland category per the Ecology rating system, the Ecology function scores for habitat, and impact intensity of surrounding land uses. The City will determine the final wetland ratings and minimum buffers. Wetland buffer widths based on the BMC rating and designated land use for the study area are identified on Table 5.

Table 5
BMC Wetland Rating and Standard Buffer Distance

Wetland	City of Bellingham Wetland Rating	City of Bellingham Land Use Intensity Designation[1]	City of Bellingham Buffer Width Criteria	City of Bellingham Buffer Width (feet)	City of Bellingham High Intensity Land Use Buffer Width (feet)[2]
Wetland A	III	Moderate	Moderate level of function for habitat (score for habitat is 20 to 28 points)	100	150
Wetland B	II	Moderate	Moderate level of function for habitat (score for habitat is 20 to 28 points)	110	150
Wetland S-2[3]	II	Moderate	Poor level of function for habitat (score for habitat is less than 20 points)	75	100
Wetland S-D[3]	III	Moderate	Poor level of function for habitat (score for habitat is less than 20 points)	60	80

Notes:
1 Moderate intensity designation land use includes residential 1 unit per acre or less, parks, and paved trails.
2 If the City of Bellingham determines that the land use intensity designation is high than the buffer widths will need to reflect the City's high intensity land use buffer width (feet). High intensity designation land use

includes commercial, urban, industrial, institutional, retail sales, residential (more than 1 unit/acre, high-intensity agriculture, high-intensity recreation, hobby farms.

3 Based on supplemental wetland information (WSDOT 2011; NES 2008; Perry pers. comm. 2012)

3.4.4 Wetland Delineation and Typing Limitations

Wetland identification is an inexact science and differences of professional opinion often occur between trained individuals. Final determinations for wetland boundaries and typing concurrence or adjustment needs are the responsibility of the regulating resource agency. Wetlands are, by definition, transitional areas; their boundaries can be altered by changes in hydrology or land use. In addition, the definition of jurisdictional wetlands may change. If a physical change occurs in the basin or 3 years pass before the proposed project is undertaken, another wetland survey should be conducted. The results and conclusions expressed herein represent Anchor QEA's professional judgment based on the information available. No other warranty, expressed or implied, is made.

4 STREAM AND OHWM DELINEATION

Anchor QEA ecologists identified and delineated the OHWMs of two exposed reaches of Padden Creek within the study area. Padden Creek flows underground through a pipe in the middle portion of the study area. In the west area of the study area, the OHWM of an unnamed tributary to Padden Creek was also delineated. The OHWM delineation methods and results are described in the following sections.

4.1 OHWM Delineation Methods

To document the OHWMs of Padden Creek and the unnamed tributary within the study area, Anchor QEA ecologists reviewed existing information (described in Section 1.1), performed an aerial photograph analysis, and conducted site visits on February 13 and 14, 2012. The OHWM delineation was completed by walking the stream and identifying the OHWM with flagging. Flagging was then documented on an aerial photograph for survey.

Anchor QEA ecologists identified the stream OHWM boundary consistent with Chapter 90.58 of the Revised Code of Washington (RCW) and Chapter 173-22 of the Washington Administrative Code (WAC). The WAC defines the OHWM as:

> *"Ordinary high water line" means the mark on the shores of all waters that will be found by examining the bed and banks and ascertaining where the presence and action of waters are so common and usual and so long continued in ordinary years, as to mark upon the soil or vegetation a character distinct from that of the abutting upland.*

4.1.1 Water Typing System Criteria

Streams in the study area were typed using the current "Water Typing System" described in the WAC Chapter 222-16-030 and according to City criteria, as defined in the BMC Chapter 16.55 Critical Areas (City of Bellingham 2012). The WAC stream typing system is recognized by Ecology and the Washington Department of Natural Resources (WDNR). The following paragraphs paraphrase the applicable WAC water typing criteria.

Type S Water refers to all waters, within their bankfull width, as inventoried as "shorelines of the state" under chapter 90.58 RCW and the rules promulgated pursuant to chapter 90.58 RCW, including periodically inundated areas of their associated wetlands.

Type F Water refers to segments of natural waters other than Type S Waters that are within the bankfull widths of defined channels and periodically inundated areas of their associated wetlands, or within lakes, ponds, or impoundments having a surface area of 0.5 acre or greater at seasonal low water and that in any case contain fish habitat. "Fish habitat" refers to habitat that is used by any fish at any life stage at any time of the year, including potential habitat likely to be used by fish that could be recovered by restoration or management, and includes off-channel habitat.

Type Np Water refers to all segments of natural waters within the bankfull width of defined channels that are perennial non-fish habitat streams. Perennial streams are waters that do not go dry any time during a year of normal rainfall. However, for the purpose of water typing, Type Np Waters include the intermittent dry portions of the perennial channel below the uppermost point of perennial flow (ephemeral channel segments).

Type Ns Water refers to all segments of natural waters within the bankfull width of the defined channels that are not Type S, F, or Np Waters. These are seasonal (ephemeral), non-fish habitat streams in which surface flow is not present for at least some portion of a year of normal rainfall and that are not located downstream from any stream reach that is a Type Np Water. Ns Waters must be physically connected by an aboveground (surface channel) system to Type S, F, or Np Waters.

4.2 Results

4.2.1 Padden Creek and Unnamed Tributary to Padden Creek

The OHWMs of two reaches of Padden Creek were delineated within the study area, one at the east end and one at the west end, identified as the eastern reach and western reach, respectively. An unnamed tributary to Padden Creek was also delineated as part of the investigation. No wetland habitat associated with the eastern or western reach of Padden

Creek was identified during the investigation. The unnamed tributary to Padden Creek is associated with Wetland A.

The OHWM boundaries for the eastern reach and the western reach of Padden Creek and the unnamed tributary to Padden Creek were marked with flags in parallel formation on both banks, as in LB-1 (left bank) and RB-1 (right bank), LB-2 and RB-2, etc.

A total of 20 flags were used to delineate the OHWM of the eastern reach of Padden Creek (LB-1 through LB-10 and RB-1 through RB-10). Approximately 166 feet of the eastern reach of Padden Creek were delineated during the investigation. Upstream of the study area, Padden Creek is an open channel. The downstream end of the eastern reach flows into an approximately 36-inch culvert (see Appendix A, Photograph 7). The eastern reach OHWM delineation results are shown on Figures 5 and 7.

A total of 28 flags were used to delineate the OHWM of the western reach of Padden Creek (LB-1 through LB-14 and RB-1 through RB-14). Approximately 287 feet of the western reach of Padden Creek were delineated during the investigation. The western reach of Padden Creek flows into the study area through an approximately 36-inch culvert located beneath Old Fairhaven Parkway (see Appendix A, Photograph 9). Where the creek flows from the culvert is also the location where the unnamed tributary to Padden Creek flows into the main channel of the creek from the east. At the downstream end of the study area, the western reach flows through three culverts beneath a walking trail. The western reach OHWM delineation results are shown on Figures 5 and 8.

Padden Creek meets the criteria of a Type F Water, perennial flow with potential fish habitat characteristics, and is specifically identified in the BMC Chapter 16.55 Critical Areas as a Type F Water (City of Bellingham 2012).

A total of 28 flags were used to delineate the OHWM of the unnamed tributary to Padden Creek (LB-15 through LB-43 and RB-15 through RB-43). Approximately 720 feet of the unnamed tributary to Padden Creek were delineated during the investigation. The unnamed tributary to Padden Creek flows into Wetland A from a culvert at the southeast corner of the wetland (see Appendix A, Photograph 3). After flowing through Wetland A, the tributary

flows roughly parallel to Old Fairhaven Parkway in a straight line with very limited meandering before flowing into the main channel of Padden Creek at the location of the culvert located beneath Old Fairhaven Parkway (see Appendix A, Photograph 9). At least one culvert located beneath Old Fairhaven Parkway was contributing flow into the tributary during the investigation. Within Wetland A, the tributary channel is nearly indistinguishable from the wetland with poorly defined banks. Flow in the tributary appears intermittent. On the first day of the delineation, February 13, there was a section of the tributary more than 100 feet long with no surface flow present. On the second day of the delineation, February 14, following a night of rainfall, surface flow was occurring throughout the delineated reach. The tributary OHWM delineation results are shown on Figures 5 and 9.

Due to the intermittent flow and undefined channels within the upper reaches of the tributary, the unnamed tributary to Padden Creek appears to meet the criteria of Type Ns Water; it contains seasonal flow and lacks potential fish habitat characteristics (City of Bellingham 2012).

Stream classifications and protective buffer widths for Padden Creek and the unnamed tributary to Padden Creek, per the BMC Chapter 16.55 Critical Areas (City of Bellingham 2012), are provided in Table 6.

Table 6
City of Bellingham Stream Classification and Standard Buffer Distance

Stream	City of Bellingham Water Typing System Rating	City of Bellingham Minimum Buffer Width (feet)	City of Bellingham Maximum Buffer Width (feet)
Padden Creek	F	100	150
Unnamed Tributary to Padden Creek	Ns	50	100

5 REFERENCES

Access Washington, 2009. *Washington State Growth Management Act*. Accessed online at http://www.gmhb.wa.gov/gma/index.html on May 18, 2009.

City of Bellingham, 2012. City of Bellingham Municipal Code. Bellingham, Washington. Accessed online at http://www.cob.org/web/bmcode.nsf/CityCode?OpenView on February 2, 2012.

Corps (U.S. Army Corps of Engineers), 2010. *Regional Supplement to the Corps of Engineers Wetland Delineation Manual: Western Mountains, Valleys, and Coast Region (Version 2.0)*, ed. J.S. Wakeley, R.W. Lichvar, and C.V. Noble. ERDC/EL TR-10-3. Vicksburg, MS: U.S. Army Engineer Research and Development Center.

Cowardin, L.M., V. Carter, F.C. Golet, and E.T. LaRoe, 1979. *Classification of Wetlands and Deepwater Habitats of the United States*. U.S. Fish and Wildlife Service, Washington, D.C.

Ecology (Washington State Department of Ecology), 1997. *Washington State Wetland Identification and Delineation Manual*. Publication #96-94. Olympia, Washington.

Ecology, 2004. *Washington State Wetlands Rating System – Western Washington: Revised*. Publication #04-06-25. Olympia, Washington.

Ecology, 2008. *Washington State Wetland Rating Form – Western Washington, Version 2*. Olympia, Washington.

Ecology, 2009. *Washington State Shoreline Management Act*. Accessed online at http://www.ecy.wa.gov/programs/sea/sma/laws_rules/index.html on May 18, 2009.

Ecology, 2012. Environmental Information; Watersheds; WRIA 1 Nooksack Basin. Accessed online at http://www.ecy.wa.gov/services/gis/maps/wria/number/wria1.htm on February 2, 2012.

Environmental Laboratory, 1987. *U.S. Army Corps of Engineers Wetland Delineation Manual*. Technical Report Y-87-1. U.S. Army Corps of Engineers Waterways Experiment Station, Vicksburg, MS.

Munsell, 1994. *Munsell Soil Color Charts*. Kollmorgen Corporation, Baltimore, Maryland.

NES (Northwest Ecological Services, LLC), 2008. *Revised Wetland Delineation for Parkway Gardens, Bellingham, Washington*.

Perry, Randel, 2012. Personal communication (telephone) between Randel Perry, U.S. Army Corps of Engineers, Regulatory Branch, NW Field Office, and Calvin Douglas, Anchor QEA, LLC. August 27, 2012.

Reed, P.B., Jr., 1988. *National List of Plant Species that Occur in Wetlands: 1988 National Summary*. U.S. Fish and Wildlife Service. Biological Report 88 (26.9).

Reed, P., Jr., 1993. *Supplement to List of Plant Species that Occur in Wetlands: Northwest (Region 9)*. U.S. Fish and Wildlife Service. Supplement to Biological Report 88 (26.9).

USDA (U.S. Department of Agriculture), 1992. Soil Survey of Whatcom County, Washington. USDA Soil Conservation Service (SCS).

USDA, 2012a. *Natural Resource Conservation Service (NRCS) Web Soil Survey*. Accessed online at http://websoilsurvey.nrcs.usda.gov/app on February 2, 2012.

USDA, 2012b. *Hydric Soil List for Washington State*. USDA Soil Conservation Service. Accessed online at http://soils.usda.gov/use/hydric/lists/state.html on February 2, 2012.

USFWS (U.S. Fish and Wildlife Service), 2012. *USFWS Wetlands Mapper for National Wetlands Inventory (NWI) Map Information*. Accessed online at http://wetlandsfws.er.usgs.gov on February 2, 2012.

WSDOT (Washington State Department of Transportation), 2011. WSDOT SR 11 Padden Creek Fish Barrier Removal Project Wetland Delineation Data.

FIGURES

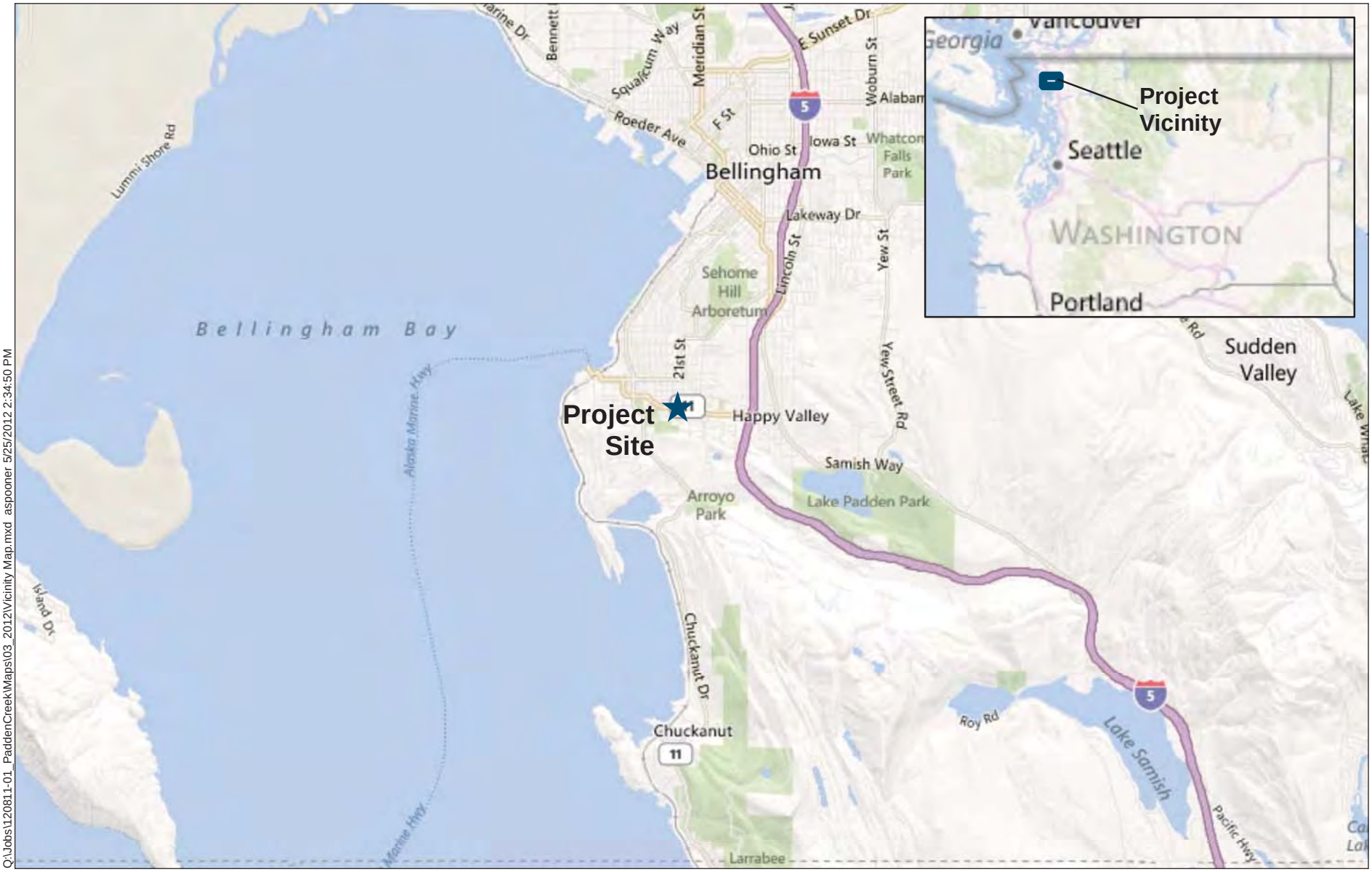

Q:\Jobs\120811-01_PaddenCreek\Maps\03_2012\Vicinity Map.mxd aspooner 5/25/2012 2:34:50 PM

Source for Data and Maps: Bing Maps 2012

ANCHOR QEA

Feet
0 25,000 50,000

Figure 1
Vicinity Map
Wetland and OHWM Delineation
Padden Creek Daylighting Project

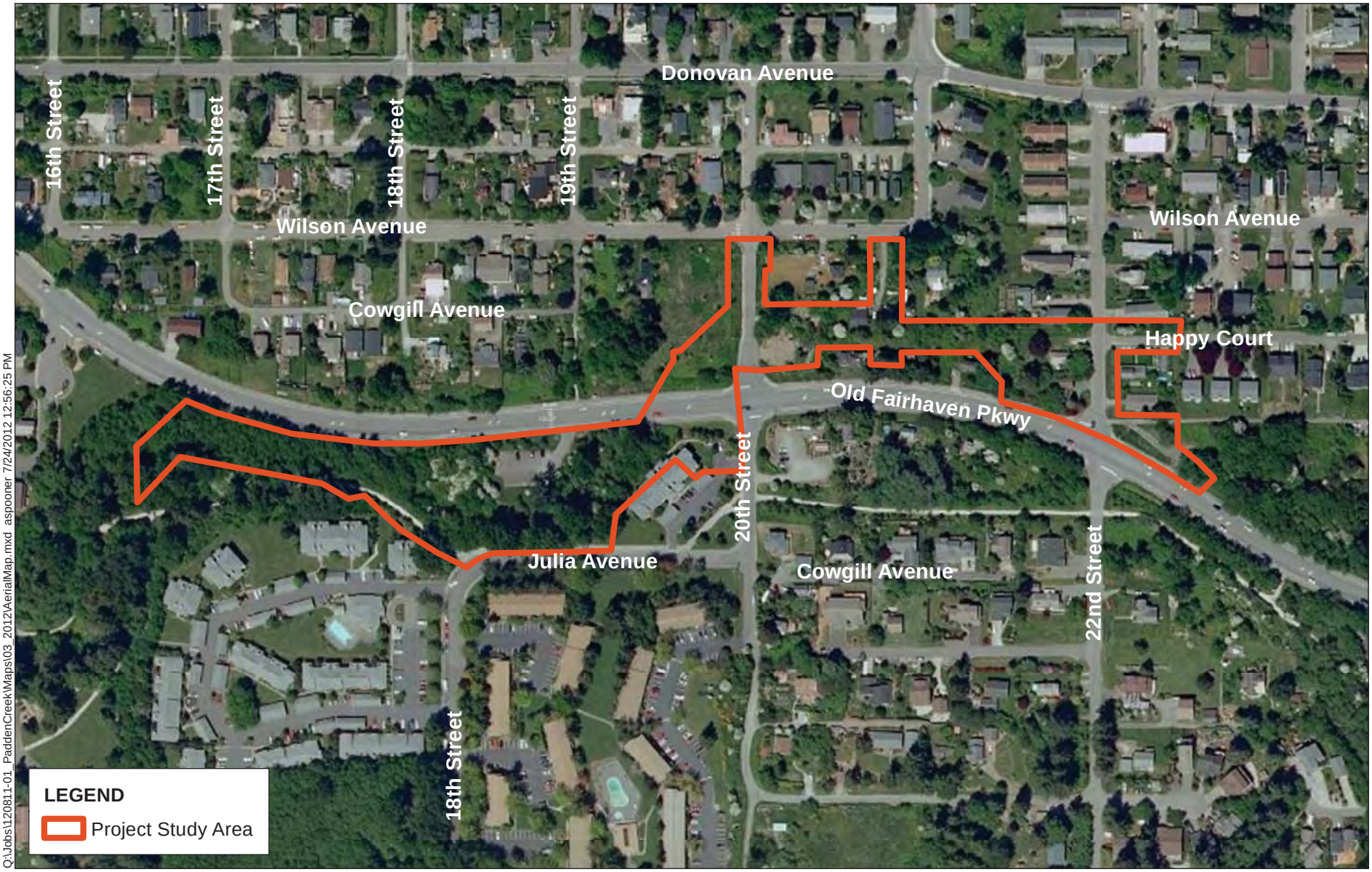

Q:\Jobs\120811-01_PaddenCreek\Maps\03_2012\AerialMap.mxd aspooner 7/24/2012 12:56:25 PM

Aerial Photography Source: ESRI 2012

ANCHOR QEA

Feet
0 300 600

Figure 2
Aerial Photograph of Study Area
Wetland and OHWM Delineation
Padden Creek Daylighting Project

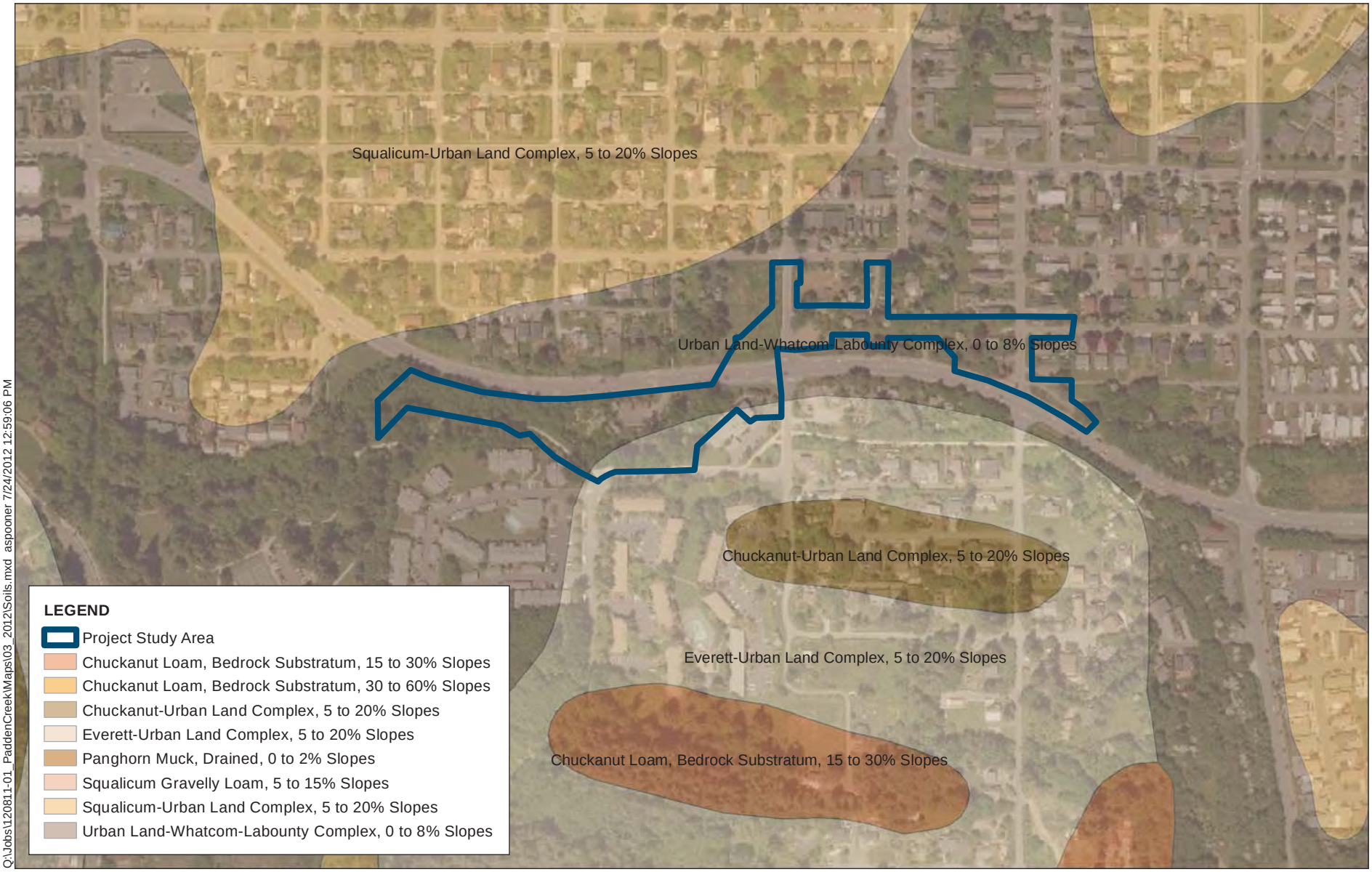

Q:\Jobs\120811-01_PaddenCreek\Maps\03_2012\Soils.mxd aspooner 7/24/2012 12:59:06 PM

Aerial Photography Source: ESRI 2012

ANCHOR QEA

Feet
0 300 600

Figure 3
Soil Units
Wetland and OHWM Delineation
Padden Creek Daylighting Project

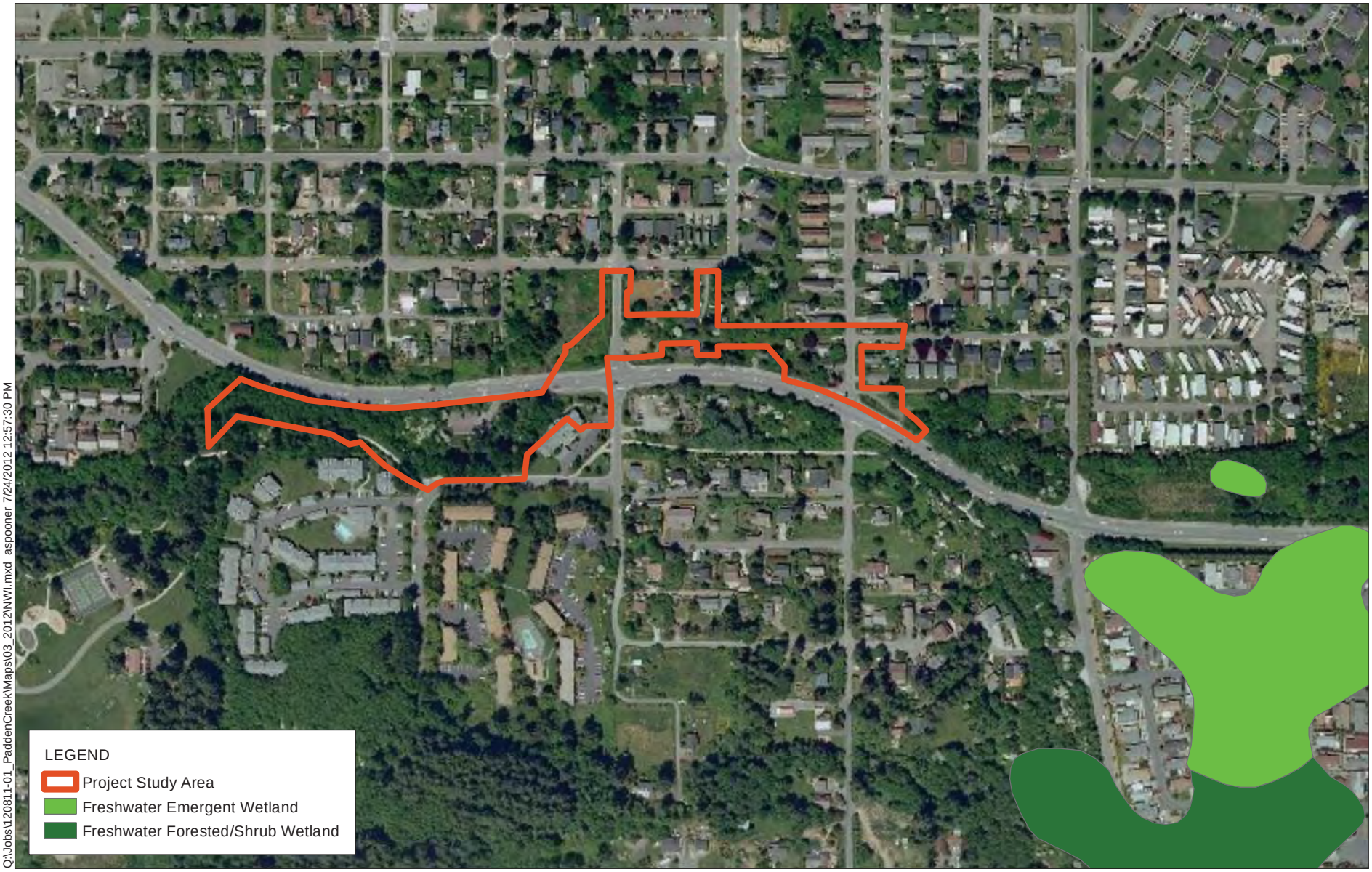

Q:\Jobs\120811-01_PaddenCreek\Maps\03_2012\NWI.mxd aspooner 7/24/2012 12:57:30 PM

Aerial Photography Source: ESRI 2012

ANCHOR QEA

Feet
0 300 600

Figure 4
National Wetland Inventory
Wetland and OHWM Delineation
Padden Creek Daylighting Project

K:\Projects\0811-SAIC\Padden Creek\0811-RP-001-WETLANDS.dwg Figure 5

Aug 22, 2012 9:27am chewett

SOURCE: Drawing prepared from survey provided by SAIC
HORIZONTAL DATUM: Washington State Plane North, NAD83.
NOTE: Supplemental wetland information based on previously performed wetland delineation associated with other projects, as described in the report.

LEGEND:

- Delineated Wetland
- Supplemental Wetland
- OHWM
- Eastern Reach of Padden Creek
- Unnamed Tributary of Padden Creek
- Western Reach of Padden Creek

0 150
Scale in Feet

ANCHOR QEA

Figure 5
Wetland and OHWM Overview Map
Wetland and OHWM Delineation
Padden Creek Daylighting Project

K:\Projects\0811-SAIC\Padden Creek\0811-RP-001-WETLANDS.dwg Figure 6A
Aug 22, 2012 9:27am chewett

SOURCE: Drawing prepared from survey provided by SAIC
HORIZONTAL DATUM: Washington State Plane North, NAD83.
NOTE: Supplemental wetland information based on previously performed wetland delineation associated with other projects, as described in the report.

LEGEND:

- Delineated Wetland
- Supplemental Wetland
- b4 Wetland Flag
- SP-5 Sample Plot
- Unnamed Tributary of Padden Creek
- OHWM

0 50
Scale in Feet

ANCHOR QEA

Figure 6A
Wetlands A and B Delineation
Wetland and OHWM Delineation
Padden Creek Daylighting Project

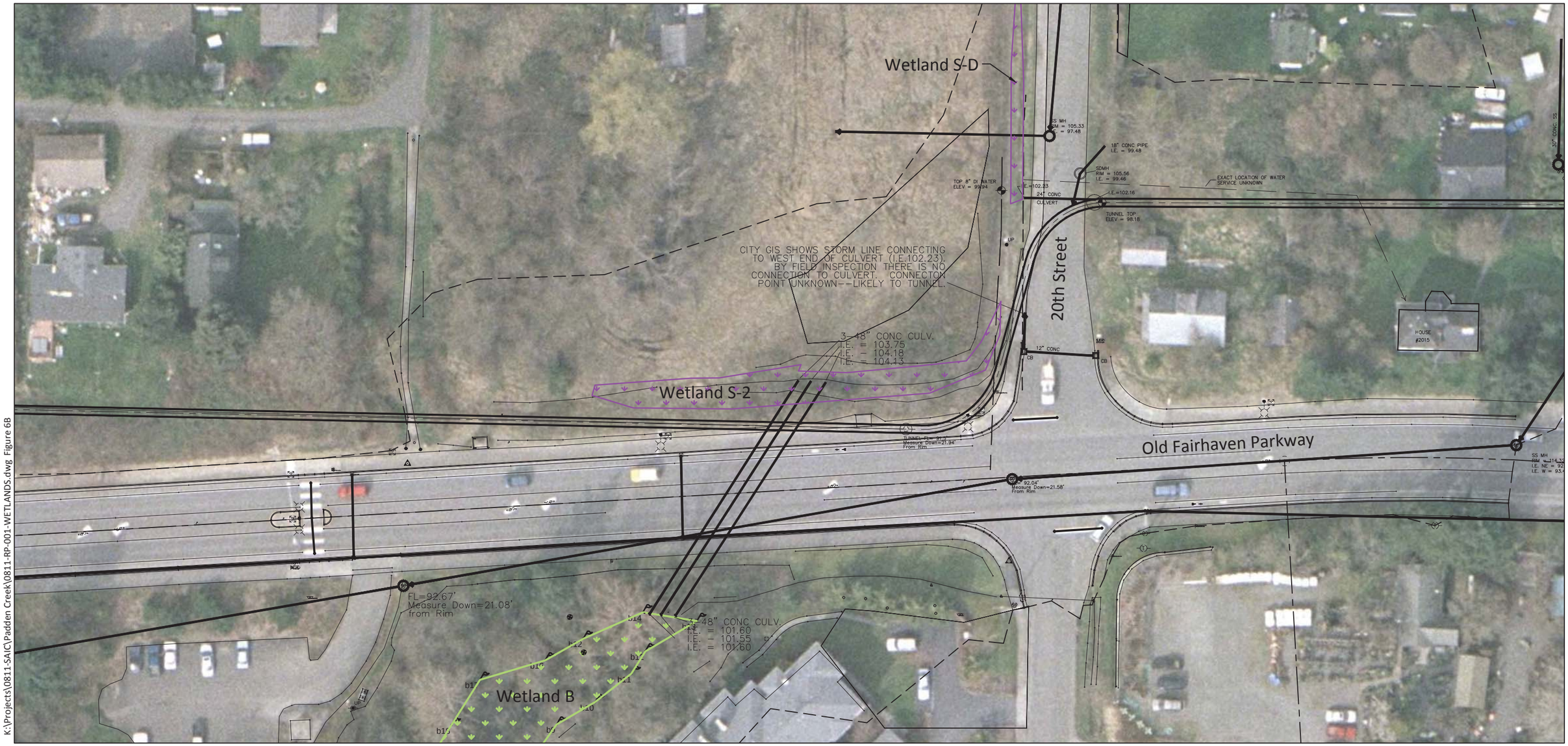

K:\Projects\0811-SAIC\Padden Creek\0811-RP-001-WETLANDS.dwg Figure 6B
Aug 22, 2012 9:27am chewett

SOURCE: Drawing prepared from survey provided by SAIC
HORIZONTAL DATUM: Washington State Plane North, NAD83.
NOTE: Supplemental wetland information based on previously performed wetland delineation associated with other projects, as described in the report.

LEGEND:

- Delineated Wetland
- Supplemental Wetland
- b4 Wetland Flag
- SP-5 Sample Plot
- OHWM

0 50
Scale in Feet

ANCHOR QEA

Figure 6B
Supplemental Wetlands S-2 and S-D Delineation
Wetland and OHWM Delineation
Padden Creek Daylighting Project

K:\Projects\0811-SAIC\Padden Creek\0811-RP-001-WETLANDS.dwg Figure 7

Aug 22, 2012 9:27am chewett

SOURCE: Drawing prepared from survey provided by SAIC
HORIZONTAL DATUM: Washington State Plane North, NAD83.

LEGEND:

- Eastern Reach of Padden Creek
- OHWM

0 50
Scale in Feet

ANCHOR QEA

Figure 7
Eastern Reach of Padden Creek
Wetland and OHWM Delineation
Padden Creek Daylighting Project

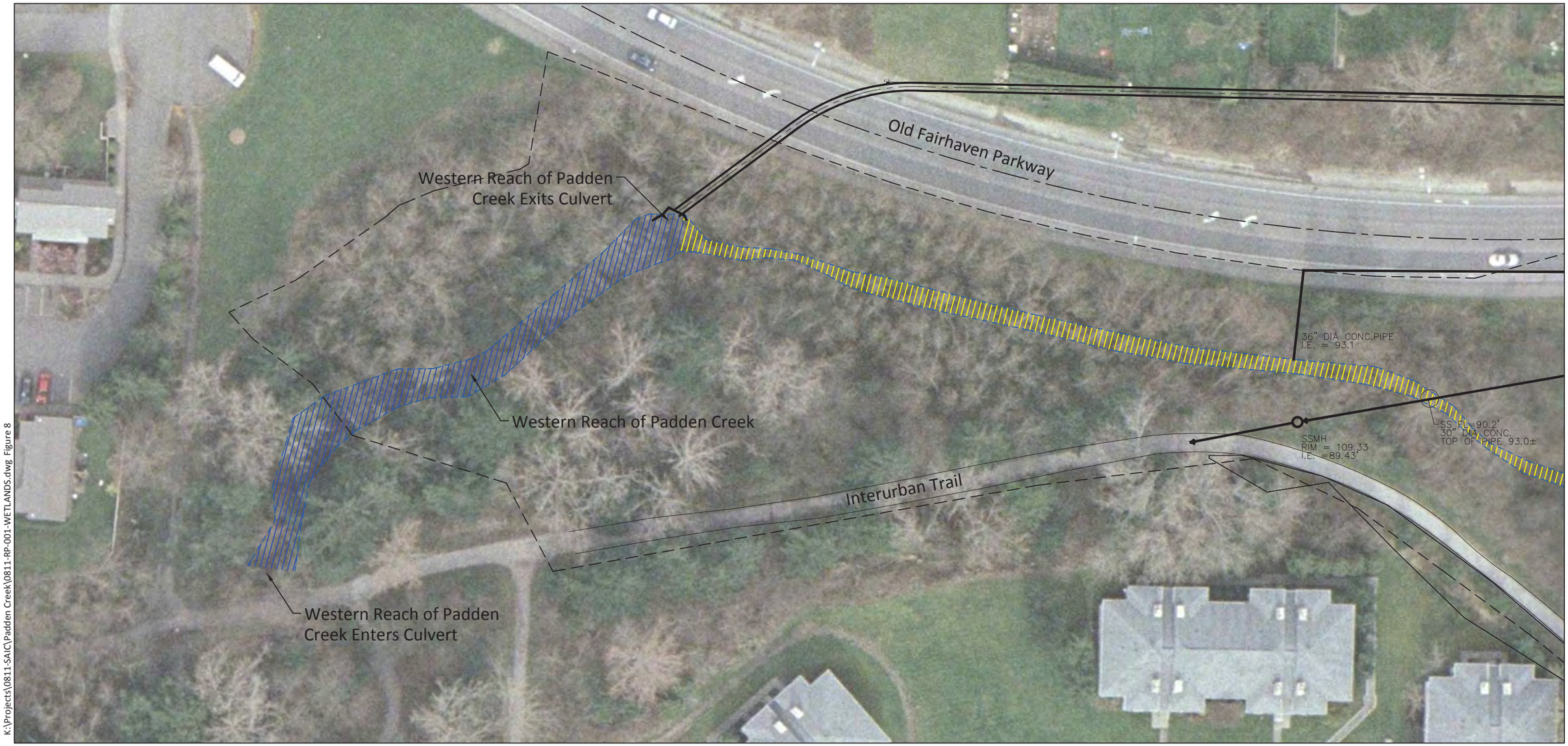

K:\Projects\0811-SAIC\Padden Creek\0811-RP-001-WETLANDS.dwg Figure 8

Aug 22, 2012 9:27am chewett

SOURCE: Drawing prepared from survey provided by SAIC
HORIZONTAL DATUM: Washington State Plane North, NAD83.

LEGEND:

- Western Reach of Padden Creek
- Unnamed Tributary of Padden Creek
- OHWM

0 50
Scale in Feet

ANCHOR QEA

Figure 8
Western Reach of Padden Creek
Wetland and OHWM Delineation
Padden Creek Daylighting Project

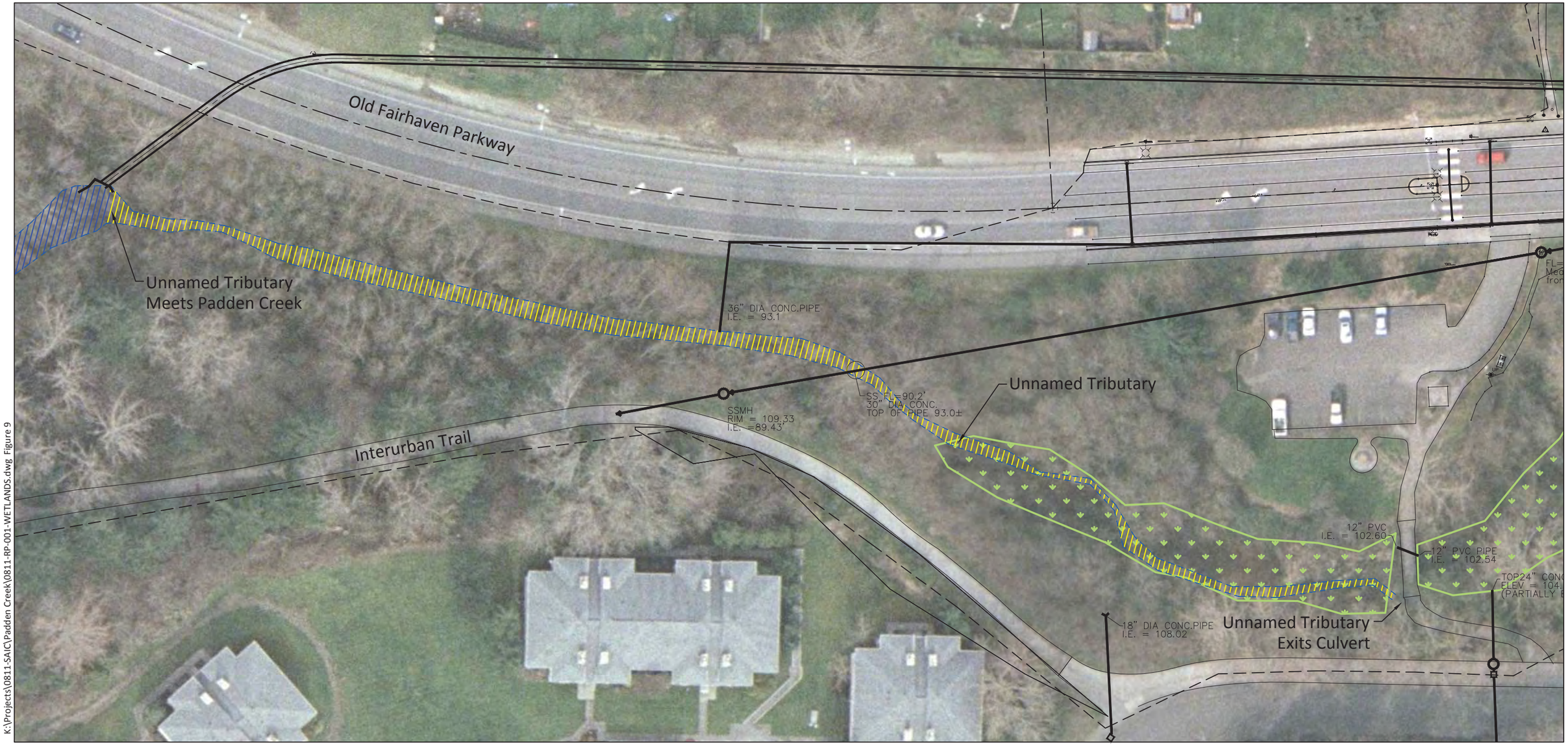

K:\Projects\0811-SAIC\Padden Creek\0811-RP-001-WETLANDS.dwg Figure 9

Aug 22, 2012 9:27am chewett

SOURCE: Drawing prepared from survey provided by SAIC
HORIZONTAL DATUM: Washington State Plane North, NAD83.

LEGEND:

- Unnamed Tributary of Padden Creek
- Western Reach of Padden Creek
- Delineated Wetland
- OHWM

0 50
Scale in Feet

ANCHOR QEA

Figure 9
Unnamed Tributary of Padden Creek
Wetland and OHWM Delineation
Padden Creek Daylighting Project

APPENDIX A
PHOTOGRAPHS

Photograph 1
Wetland A from walking path at west end of wetland

Photograph 2
Wetland A with unnamed tributary to Padden Creek flowing though wetland

Photograph 3
Unnamed tributary to Padden Creek flowing into western area of Wetland A

Photograph 4
Wetland B from east end of wetland

Photograph 5
Two culverts beneath walking trail that appear to have intermittent surface water connections between Wetlands A and B

Photograph 6
Eastern reach of Padden Creek

Photograph 7
Downstream culvert at eastern reach of Padden Creek

Photograph 8
Western reach of Padden Creek

Photograph 9
Upstream culvert at eastern reach of Padden Creek, unnamed tributary to Padden Creek coming in from the right

Photograph 10
Unnamed tributary to Padden Creek

APPENDIX B
SAMPLE PLOT SUMMARY DATA

Table B-1
Plant Species Observed During the Investigation

Scientific Name	Common Name	Indicator Status[1]
Trees		
Acer macrophylum	Big-leaf maple	FACU
Alnus rubra	Red alder	FAC
Populus trichocarpa	Black cottonwood	FAC
Pseudotsuga menziesii	Douglas fir	FACU
Salix lasiandra	Pacific willow	FACW+
Thuja plicata	Western red cedar	FAC
Shrubs		
Acer circinatum	Vine maple	FAC-
Cornus sericea	Red-osier dogwood	FACW
Corylus cornuta	Beaked hazelnut	FACU
Hedera hibernica	English ivy	UPL
Ilex aquifolium	Holly	FACU
Oemleria cerasiformis	Indian plum	FACU
Polygonum cuspidatum	Japanese knotweed	FACU
Prunus emarginata	Bitter cherry	FACU
Rosa nutkana	Nootka rose	FAC
Rubus armeniacus	Himalayan blackberry	FACU
Rubus spectabilis	Salmonberry	FAC+
Rubus ursinus	Trailing blackberry	FACU
Spiraea douglasii	Spirea	FACW
Symphoricarpos albus	Snowberry	FACU
Grass, Ferns, & Herbaceous		
Athyrium filix-femina	Lady fern	FAC+
Carex obnupta	Slough sedge	OBL
Equisetum arvense	Field horsetail	FAC
Equisetum telmateia	Giant horsetail	FACW
Hedera hibernica	English ivy	UPL
Polystichum munitum	Sword fern	FACU
Pteridium aquilinum	Bracken fern	FACU
Ranunculus repens	Creeping buttercup	FACW

Note:
1 - These categories, referred to as the "wetland indicator status" (from the wettest to driest habitats) are as follows: obligate wetland (OBL) plants; facultative wetland (FACW) plants; facultative (FAC) plants; facultative upland (FACU) plants; and obligate upland (UPL) plants.

Table B-2
Summary of Wetland Sample Plot Vegetation Data

Wet	SP	Scientific Name	Common Name	Indicator Status[1]	Cover %
A	1Wet	*Alnus rubra*	Red alder	FAC	40
		Athyrium filix-femina	Lady fern	FAC+	50
		Equisetum telmateia	Giant horsetail	FACW	5
		Oemleria cerasiformis	Indian plum	FACU	20
		Rubus armeniacus	Himalayan blackberry	FACU	20
		Spiraea douglasii	Spirea	FACW	30
	2Up	*Corylus cornuta*	Beaked hazelnut	FACU	40
		Ilex aquifolium	Holly	FACU	15
		Polystichum munitum	Sword fern	FACU	10
		Prunus emarginata	Bitter cherry	FACU	20
		Rubus armeniacus	Himalayan blackberry	FACU	50
	3Wet	*Athyrium filix-femina*	Lady fern	FAC+	50
		Equisetum telmateia	Giant horsetail	FACW	30
		Prunus emarginata	Bitter cherry	FACU	15
		Rubus armeniacus	Himalayan blackberry	FACU	30
	4Up	*Corylus cornuta*	Beaked hazelnut	FACU	40
		Oemleria cerasiformis	Indian plum	FACU	10
		Polystichum munitum	Sword fern	FACU	50
		Prunus emarginata	Bitter cherry	FACU	30
		Rosa nutkana	Nootka rose	FAC	15
		Rubus armeniacus	Himalayan blackberry	FACU	35
		Symphoricarpos albus	Snowberry	FACU	10
B	5Wet	*Equisetum arvense*	Field horsetail	FAC	20
		Prunus emarginata	Bitter cherry	FACU	15
		Ranunculus repens	Creeping buttercup	FACW	40
		Rubus armeniacus	Himalayan blackberry	FACU	25
		Salix lasiandra	Pacific willow	FACW+	20
		Spiraea douglasii	Spirea	FACW	60
	6Up	*Corylus cornuta*	Beaked hazelnut	FACU	30
		Hedera hibernica	English ivy	UPL	20
		Ilex aquifolium	Holly	FACU	40
		Polystichum munitum	Sword fern	FACU	20
		Populus trichocarpa	Black cottonwood	FAC	10
		Prunus emarginata	Bitter cherry	FACU	30
		Pteridium aquilinum	Bracken fern	FACU	20
		Rubus armeniacus	Himalayan blackberry	FACU	40
		Rubus ursinus	Trailing blackberry	FACU	20

Note:
1 - These categories, referred to as the "wetland indicator status" (from the wettest to driest habitats) are as follows: obligate wetland (OBL) plants; facultative wetland (FACW) plants; facultative (FAC) plants; facultative upland (FACU) plants; and obligate upland (UPL) plants.

Table B-3
Summary of Wetland Sample Plot Hydrology Data

Wet	SP	Hydrology
A	1Wet	Saturation at surface, water table observed at 9 inches from surface
	2Up	No saturation or water table observed within sample plot
	3Wet	Saturation at surface, water table observed at 11 inches from surface
	4Up	No saturation or water table observed within sample plot
B	5Wet	Saturation and water table at surface
	6Up	No saturation or water table observed within sample plot

Table B-4
Summary of Wetland Sample Plot Soils Data

Wet	SP	Soil Horizon (in)	Matrix Color	Redox Color	Redox Abundance (%)	Texture
A	1Wet	0 to 4	10YR 4/1	None	None	Clay loam
		4 to 18+	10YR 4/1	2.5YR 4/6	30	Clay loam
	2Up	0 to 10	10YR 4/2	None	None	Clay loam
		10 to 18+	10YR 4/2	None	None	Clay loam w/gravel
	3Wet	0 to 4	10YR 4/1	None	None	Clay loam
		4 to 18+	10YR 4/1	2.5Y 6/4	20	Clay loam
	4Up	0 to 8	10YR 4/2	None	None	Clay loam
		8 to 18+	10YR 5/2	10YR 6/6	40	Clay loam
B	5Wet	0 to 18+	10YR 4/1	10YR 6/4	20	Clay loam w/gravel
	6Up	0 to 10	10YR 4/2	None	None	Clay loam
		10 to 18+	10YR 6/4	None	None	Clay loam

Table B-5
Summary of Wetland Sample Plot Data and Wetland Determination

Wet	SP	Vegetation	Soils	Hydrology	Determination
A	1Wet	Hydrophytic	Hydric	Positive	Wetland
	2Up	Non-hydrophytic	Non-hydric	Negative	Upland
	3Wet	Hydrophytic	Hydric	Positive	Wetland
	4Up	Non-hydrophytic	Non-hydric	Negative	Upland
B	5Wet	Hydrophytic	Hydric	Positive	Wetland
	6Up	Non-hydrophytic	Non-hydric	Negative	Upland

APPENDIX C
FIELD DATA SHEETS

WETLAND DETERMINATION DATA FORM – Western Mountains, Valleys, and Coast Region

Project Site: Padden Creek Daylighting Project | City/County: Bellingham/Whatcom | Sampling Date: February 13, 2012

Applicant/Owner: City of Bellingham | State: WA | Sampling Point: Wet A SP1Wet

Investigator(s): C Douglas & A Spooner | Section, Township, Range: S12, T37N, R2E

Landform (hillslope, terrace, etc.): Associated Stream Channel | Local relief (concave, convex, none): concave | Slope (%): 0% to 2%

Subregion (LRR): A | Lat: 47.69N | Long: 122.62W | Datum: _____

Soil Map Unit Name: Everett Urban Land | NWI classification: None Mapped

Are climatic / hydrologic conditions on the site typical for this time of year? Yes ☒ No ☐ (If no, explain in Remarks.)

Are Vegetation ☐, Soil ☐, or Hydrology ☐, significantly disturbed? Are "Normal Circumstances" present? Yes ☒ No ☐

Are Vegetation ☐, Soil ☐, or Hydrology ☐, naturally problematic? (If needed, explain any answers in Remarks.)

SUMMARY OF FINDINGS – Attach site map showing sampling point locations, transects, important features, etc.

Hydrophytic Vegetation Present?	Yes	☒	No	☐	
Hydric Soil Present?	Yes	☒	No	☐	**Is the Sampled Area within a Wetland?** **Yes** ☒ **No** ☐
Wetland Hydrology Present?	Yes	☒	No	☐	

Remarks: Wetland A is located within Fairhaven Park and is associated with a stream channel. Residential development, roads, park trails and parking areas are located in close proximity to the wetland. Wetland is hydrologically connected to Wetland B through culverts beneathe a walking bridge. No flow was occuring between the wetlands during the investigation. Wetland includesdepressional, riverine, and slope HGM classes.

VEGETATION – Use scientific names of plants

Tree Stratum (Plot size: 30 foot radius)	Absolute % Cover	Dominant Species?	Indicator Status
1. *Alnus rubra*	40	yes	FACW
2.			
3.			
4.			
50% = 1, 20% = 0	40	= Total Cover	
Sapling/Shrub Stratum (Plot size: 15 foot radius)			
1. *Oemleria cerasiformis*	20	yes	FACU
2. *Rubus armeniacus*	20	yes	FACU
3. *Spiraea douglasii*	30	yes	FACW
4.			
5.			
50% = 0, 20% = 3	70	= Total Cover	
Herb Stratum (Plot size: 3 foot radius)			
1. *Athyrium filix-femina*	50	yes	FAC
2. *Equisetum telmateia*	5	no	FACW
3.			
4.			
5.			
6.			
7.			
8.			
9.			
10.			
11.			
50% = 1, 20% = 0	55	= Total Cover	
Woody Vine Stratum (Plot size: 3 foot radius)			
1.			
2.			
50% = _____, 20% = _____	0	= Total Cover	

% Bare Ground in Herb Stratum 45

Dominance Test Worksheet:

Number of Dominant Species That Are OBL, FACW, or FAC:	3	(A)
Total Number of Dominant Species Across All Strata:	5	(B)
Percent of Dominant Species That Are OBL, FACW, or FAC:	60	(A/B)

Prevalence Index worksheet:

Total % Cover of:		Multiply by:	
OBL species		x1 =	
FACW species		x2 =	
FAC species		x3 =	
FACU species		x4 =	
UPL species		x5 =	
Column Totals:	(A)		(B)

Prevalence Index = B/A = _____

Hydrophytic Vegetation Indicators:

- ☐ 1 – Rapid Test for Hydrophytic Vegetation
- ☒ 2 - Dominance Test is >50%
- ☐ 3 - Prevalence Index is ≤3.0[1]
- ☐ 4 - Morphological Adaptations[1] (Provide supporting data in Remarks or on a separate sheet)
- ☐ 5 - Wetland Non-Vascular Plants[1]
- ☐ Problematic Hydrophytic Vegetation[1] (Explain)

[1]Indicators of hydric soil and wetland hydrology must be present, unless disturbed or problematic.

Hydrophytic Vegetation Present? **Yes** ☒ **No** ☐

Remarks: 60% dominant wetland vegetation per the Dominance Test

Project Site: Padden Creek Daylighting Project

SOIL

Sampling Point: Wet A SP1Wet

Profile Description: (Describe to the depth needed to document the indicator or confirm the absence of indicators.)

Depth	Matrix		Redox Features					
(inches)	Color (moist)	%	Color (moist)	%	Type[1]	Loc[2]	Texture	Remarks
0 to 4	10YR 4/1	100	None	None	None	None	Clay loam	
4 to 18+	10YR 4/1	70	2.5YR 4/6	30	D	M	Clay loam	

[1]Type: C= Concentration, D=Depletion, RM=Reduced Matrix, CS=Covered or Coated Sand Grains. [2]Location: PL=Pore Lining, M=Matrix

Hydric Soil Indicators: (Applicable to all LRRs, unless otherwise noted.)

- ☐ Histosol (A1)
- ☐ Histic Epipedon (A2)
- ☐ Black Histic (A3)
- ☐ Hydrogen Sulfide (A4)
- ☐ Depleted Below Dark Surface (A11)
- ☐ Thick Dark Surface (A12)
- ☐ Sandy Mucky Mineral (S1)
- ☐ Sandy Gleyed Matrix (S4)
- ☐ Sandy Redox (S5)
- ☐ Stripped Matrix (S6)
- ☐ Loamy Mucky Mineral (F1) **(except MLRA 1)**
- ☐ Loamy Gleyed Matrix (F2)
- ☒ Depleted Matrix (F3)
- ☐ Redox Dark Surface (F6)
- ☐ Depleted Dark Surface (F7)
- ☐ Redox Depressions (F8)

Indicators for Problematic Hydric Soils[3]:

- ☐ 2 cm Muck (A10)
- ☐ Red Parent Material (TF2)
- ☐ Very Shallow Dark Surface (TF12)
- ☐ Other (Explain in Remarks)

[3]Indicators of hydrophytic vegetation and wetland hydrology must be present, unless disturbed or problematic.

Restrictive Layer (if present):

Type: ____

Depth (inches): ____

Hydric Soils Present? **Yes** ☒ **No** ☐

Remarks: 1 chroma with redox features

HYDROLOGY

Wetland Hydrology Indicators:

Primary Indicators (minimum of one required; check all that apply)

- ☐ Surface Water (A1)
- ☒ High Water Table (A2)
- ☒ Saturation (A3)
- ☒ Water Marks (B1)
- ☐ Sediment Deposits (B2)
- ☒ Drift Deposits (B3)
- ☐ Algal Mat or Crust (B4)
- ☐ Iron Deposits (B5)
- ☐ Surface Soil Cracks (B6)
- ☐ Inundation Visible on Aerial Imagery (B7)
- ☐ Sparsely Vegetated Concave Surface (B8)
- ☒ Water-Stained Leaves (B9) **(except MLRA 1, 2, 4A, and 4B)**
- ☐ Salt Crust (B11)
- ☐ Aquatic Invertebrates (B13)
- ☐ Hydrogen Sulfide Odor (C1)
- ☐ Oxidized Rhizospheres along Living Roots (C3)
- ☐ Presence of Reduced Iron (C4)
- ☐ Recent Iron Reduction in Tilled Soils (C6)
- ☐ Stunted or Stresses Plants (D1) **(LRR A)**
- ☐ Other (Explain in Remarks)

Secondary Indicators (2 or more required)

- ☐ Water-Stained Leaves (B9) **(MLRA 1, 2, 4A, and 4B)**
- ☐ Drainage Patterns (B10)
- ☐ Dry-Season Water Table (C2)
- ☐ Saturation Visible on Aerial Imagery (C9)
- ☐ Geomorphic Position (D2)
- ☐ Shallow Aquitard (D3)
- ☐ FAC-Neutral Test (D5)
- ☐ Raised Ant Mounds (D6) **(LRR A)**
- ☐ Frost-Heave Hummocks (D7)

Field Observations:

Surface Water Present?	Yes	☐	No	☒	Depth (inches):	
Water Table Present?	Yes	☒	No	☐	Depth (inches):	9 inches
Saturation Present? (includes capillary fringe)	Yes	☒	No	☐	Depth (inches):	at surface

Wetland Hydrology Present? **Yes** ☒ **No** ☐

Describe Recorded Data (stream gauge, monitoring well, aerial photos, previous inspections), if available:

Remarks: Saturation and water table observed in sample plot

WETLAND DETERMINATION DATA FORM – Western Mountains, Valleys, and Coast Region

Project Site: Padden Creek Daylighting Project City/County: Bellingham/Whatcom Sampling Date: February 13, 2012

Applicant/Owner: City of Bellingham State: WA Sampling Point: Wet A SP2Up

Investigator(s): C Douglas & A Spooner Section, Township, Range: S12, T37N, R2E

Landform (hillslope, terrace, etc.): Associated Stream Channel Local relief (concave, convex, none): concave Slope (%): 0% to 2%

Subregion (LRR): A Lat: 47.69N Long: 122.62W Datum: _____

Soil Map Unit Name: Everett Urban Land NWI classification: None Mapped

Are climatic / hydrologic conditions on the site typical for this time of year? Yes ☒ No ☐ (If no, explain in Remarks.)

Are Vegetation ☐, Soil ☐, or Hydrology ☐, significantly disturbed? Are "Normal Circumstances" present? Yes ☒ No ☐

Are Vegetation ☐, Soil ☐, or Hydrology ☐, naturally problematic? (If needed, explain any answers in Remarks.)

SUMMARY OF FINDINGS – Attach site map showing sampling point locations, transects, important features, etc.

Hydrophytic Vegetation Present?	Yes ☐	No ☒	**Is the Sampled Area within a Wetland?**	**Yes ☐ No ☒**
Hydric Soil Present?	Yes ☐	No ☒		
Wetland Hydrology Present?	Yes ☐	No ☒		

Remarks: Wetland A is located within Fairhaven Park and is associated with a stream channel. Residential development, roads, park trails and parking areas are located in close proximity to the wetland. Wetland is hydrologically connected to Wetland B through culverts beneathe a walking bridge. No flow was occuring between the wetlands during the investigation. Wetland includesdepressional, riverine, and slope HGM classes.

VEGETATION – Use scientific names of plants

Tree Stratum (Plot size: 30 foot radius)	Absolute % Cover	Dominant Species?	Indicator Status
1. *Prunus emarginata*	20	yes	FACU
2.			
3.			
4.			
50% = 1, 20% = 0	20	= Total Cover	
Sapling/Shrub Stratum (Plot size: 15 foot radius)			
1. *Corylus cornuta*	40	yes	FACU
2. *Ilex aquifolium*	15	no	FACU
3. *Rubus armeniacus*	50	yes	FACU
4.			
5.			
50% = 0, 20% = 2	100	= Total Cover	
Herb Stratum (Plot size: 3 foot radius)			
1. *Polystichum munitum*	10	yes	FACU
2.			
3.			
4.			
5.			
6.			
7.			
8.			
9.			
10.			
11.			
50% = 1, 20% = 0	10	= Total Cover	
Woody Vine Stratum (Plot size: 3 foot radius)			
1.			
2.			
50% = _____, 20% = _____	0	= Total Cover	

% Bare Ground in Herb Stratum 90

Dominance Test Worksheet:

Number of Dominant Species That Are OBL, FACW, or FAC:	0	(A)
Total Number of Dominant Species Across All Strata:	4	(B)
Percent of Dominant Species That Are OBL, FACW, or FAC:	0	(A/B)

Prevalence Index worksheet:

Total % Cover of:		Multiply by:	
OBL species		x1 =	
FACW species		x2 =	
FAC species		x3 =	
FACU species		x4 =	
UPL species		x5 =	
Column Totals:	(A)		(B)

Prevalence Index = B/A = _____

Hydrophytic Vegetation Indicators:

- ☐ 1 – Rapid Test for Hydrophytic Vegetation
- ☐ 2 - Dominance Test is >50%
- ☐ 3 - Prevalence Index is ≤3.0[1]
- ☐ 4 - Morphological Adaptations[1] (Provide supporting data in Remarks or on a separate sheet)
- ☐ 5 - Wetland Non-Vascular Plants[1]
- ☐ Problematic Hydrophytic Vegetation[1] (Explain)

[1]Indicators of hydric soil and wetland hydrology must be present, unless disturbed or problematic.

Hydrophytic Vegetation Present? **Yes ☐ No ☒**

Remarks: 0% dominant wetland vegetation per the Dominance Test

Project Site: Padden Creek Daylighting Project

SOIL

Sampling Point: Wet A SP2Up

Profile Description: (Describe to the depth needed to document the indicator or confirm the absence of indicators.)

Depth	Matrix		Redox Features					
(inches)	Color (moist)	%	Color (moist)	%	Type[1]	Loc[2]	Texture	Remarks
0 to 10	10YR 4/2	100	None	None	None	None	Clay loam	
10 to 18+	10YR 4/2	100	None	None	None	None	Clay loam	w/gravel

[1]Type: C= Concentration, D=Depletion, RM=Reduced Matrix, CS=Covered or Coated Sand Grains. [2]Location: PL=Pore Lining, M=Matrix

Hydric Soil Indicators: (Applicable to all LRRs, unless otherwise noted.)

- ☐ Histosol (A1)
- ☐ Histic Epipedon (A2)
- ☐ Black Histic (A3)
- ☐ Hydrogen Sulfide (A4)
- ☐ Depleted Below Dark Surface (A11)
- ☐ Thick Dark Surface (A12)
- ☐ Sandy Mucky Mineral (S1)
- ☐ Sandy Gleyed Matrix (S4)
- ☐ Sandy Redox (S5)
- ☐ Stripped Matrix (S6)
- ☐ Loamy Mucky Mineral (F1) **(except MLRA 1)**
- ☐ Loamy Gleyed Matrix (F2)
- ☐ Depleted Matrix (F3)
- ☐ Redox Dark Surface (F6)
- ☐ Depleted Dark Surface (F7)
- ☐ Redox Depressions (F8)

Indicators for Problematic Hydric Soils[3]:

- ☐ 2 cm Muck (A10)
- ☐ Red Parent Material (TF2)
- ☐ Very Shallow Dark Surface (TF12)
- ☐ Other (Explain in Remarks)

[3]Indicators of hydrophytic vegetation and wetland hydrology must be present, unless disturbed or problematic.

Restrictive Layer (if present):

Type: _____

Depth (inches): _____

Hydric Soils Present? **Yes** ☐ **No** ☒

Remarks: 2 chroma with no redox features

HYDROLOGY

Wetland Hydrology Indicators:

Primary Indicators (minimum of one required; check all that apply)

- ☐ Surface Water (A1)
- ☐ High Water Table (A2)
- ☐ Saturation (A3)
- ☐ Water Marks (B1)
- ☐ Sediment Deposits (B2)
- ☐ Drift Deposits (B3)
- ☐ Algal Mat or Crust (B4)
- ☐ Iron Deposits (B5)
- ☐ Surface Soil Cracks (B6)
- ☐ Inundation Visible on Aerial Imagery (B7)
- ☐ Sparsely Vegetated Concave Surface (B8)
- ☐ Water-Stained Leaves (B9) **(except MLRA 1, 2, 4A, and 4B)**
- ☐ Salt Crust (B11)
- ☐ Aquatic Invertebrates (B13)
- ☐ Hydrogen Sulfide Odor (C1)
- ☐ Oxidized Rhizospheres along Living Roots (C3)
- ☐ Presence of Reduced Iron (C4)
- ☐ Recent Iron Reduction in Tilled Soils (C6)
- ☐ Stunted or Stresses Plants (D1) **(LRR A)**
- ☐ Other (Explain in Remarks)

Secondary Indicators (2 or more required)

- ☐ Water-Stained Leaves (B9) **(MLRA 1, 2, 4A, and 4B)**
- ☐ Drainage Patterns (B10)
- ☐ Dry-Season Water Table (C2)
- ☐ Saturation Visible on Aerial Imagery (C9)
- ☐ Geomorphic Position (D2)
- ☐ Shallow Aquitard (D3)
- ☐ FAC-Neutral Test (D5)
- ☐ Raised Ant Mounds (D6) **(LRR A)**
- ☐ Frost-Heave Hummocks (D7)

Field Observations:

Surface Water Present?	Yes	☐	No	☒	Depth (inches):	
Water Table Present?	Yes	☐	No	☒	Depth (inches):	
Saturation Present? (includes capillary fringe)	Yes	☐	No	☒	Depth (inches):	

Wetland Hydrology Present? **Yes** ☐ **No** ☒

Describe Recorded Data (stream gauge, monitoring well, aerial photos, previous inspections), if available:

Remarks: No saturation or water table observed in sample plot

WETLAND DETERMINATION DATA FORM – Western Mountains, Valleys, and Coast Region

Project Site: Padden Creek Daylighting Project City/County: Bellingham/Whatcom Sampling Date: February 13, 2012

Applicant/Owner: City of Bellingham State: WA Sampling Point: Wet A SP3Wet

Investigator(s): C Douglas & A Spooner Section, Township, Range: S12, T37N, R2E

Landform (hillslope, terrace, etc.): Associated Stream Channel Local relief (concave, convex, none): concave Slope (%): 0% to 2%

Subregion (LRR): A Lat: 47.69N Long: 122.62W Datum: _____

Soil Map Unit Name: Everett Urban Land NWI classification: None Mapped

Are climatic / hydrologic conditions on the site typical for this time of year? Yes ☒ No ☐ (If no, explain in Remarks.)

Are Vegetation ☐, Soil ☐, or Hydrology ☐, significantly disturbed? Are "Normal Circumstances" present? Yes ☒ No ☐

Are Vegetation ☐, Soil ☐, or Hydrology ☐, naturally problematic? (If needed, explain any answers in Remarks.)

SUMMARY OF FINDINGS – Attach site map showing sampling point locations, transects, important features, etc.

Hydrophytic Vegetation Present?	Yes	☒	No	☐	
Hydric Soil Present?	Yes	☒	No	☐	**Is the Sampled Area within a Wetland?** **Yes** ☒ **No** ☐
Wetland Hydrology Present?	Yes	☒	No	☐	

Remarks: Wetland A is located within Fairhaven Park and is associated with a stream channel. Residential development, roads, park trails and parking areas are located in close proximity to the wetland. Wetland is hydrologically connected to Wetland B through culverts beneathe a walking bridge. No flow was occuring between the wetlands during the investigation. Wetland includesdepressional, riverine, and slope HGM classes.

VEGETATION – Use scientific names of plants

Tree Stratum (Plot size: 30 foot radius)	Absolute % Cover	Dominant Species?	Indicator Status
1. *Prunus emarginata*	15	yes	FACU
2.			
3.			
4.			
50% = 1, 20% = 0	15	= Total Cover	
Sapling/Shrub Stratum (Plot size: 15 foot radius)			
1. *Rubus armeniacus*	15	yes	FACU
2.			
3.			
4.			
5.			
50% = 1, 20% = 0	15	= Total Cover	
Herb Stratum (Plot size: 3 foot radius)			
1. *Athyrium filix-femina*	50	yes	FAC
2. *Equisetum telmateia*	30	yes	FACW
3.			
4.			
5.			
6.			
7.			
8.			
9.			
10.			
11.			
50% = 1, 20% = 1	80	= Total Cover	
Woody Vine Stratum (Plot size: 3 foot radius)			
1.			
2.			
50% = _____, 20% = _____	0	= Total Cover	

% Bare Ground in Herb Stratum 20

Dominance Test Worksheet:

Number of Dominant Species That Are OBL, FACW, or FAC:	2	(A)
Total Number of Dominant Species Across All Strata:	4	(B)
Percent of Dominant Species That Are OBL, FACW, or FAC:	50	(A/B)

Prevalence Index worksheet:

Total % Cover of:		Multiply by:	
OBL species		x1 =	
FACW species		x2 =	
FAC species		x3 =	
FACU species		x4 =	
UPL species		x5 =	
Column Totals:	(A)		(B)

Prevalence Index = B/A = _____

Hydrophytic Vegetation Indicators:

- ☐ 1 – Rapid Test for Hydrophytic Vegetation
- ☒ 2 - Dominance Test is >50%
- ☐ 3 - Prevalence Index is ≤3.0[1]
- ☐ 4 - Morphological Adaptations[1] (Provide supporting data in Remarks or on a separate sheet)
- ☐ 5 - Wetland Non-Vascular Plants[1]
- ☐ Problematic Hydrophytic Vegetation[1] (Explain)

[1]Indicators of hydric soil and wetland hydrology must be present, unless disturbed or problematic.

Hydrophytic Vegetation Present? **Yes** ☒ **No** ☐

Remarks: 50% dominant wetland vegetation per the Dominance Test

Project Site: Padden Creek Daylighting Project

SOIL

Sampling Point: Wet A SP3Wet

Profile Description: (Describe to the depth needed to document the indicator or confirm the absence of indicators.)

Depth	Matrix		Redox Features					
(inches)	Color (moist)	%	Color (moist)	%	Type[1]	Loc[2]	Texture	Remarks
0 to 4	10YR 4/1	100	None	None	None	None	Clay loam	
4 to 18+	10YR 4/1	80	2.5Y 6/4	20	D	M	Clay loam	

[1]Type: C= Concentration, D=Depletion, RM=Reduced Matrix, CS=Covered or Coated Sand Grains. [2]Location: PL=Pore Lining, M=Matrix

Hydric Soil Indicators: (Applicable to all LRRs, unless otherwise noted.)

- ☐ Histosol (A1)
- ☐ Histic Epipedon (A2)
- ☐ Black Histic (A3)
- ☐ Hydrogen Sulfide (A4)
- ☐ Depleted Below Dark Surface (A11)
- ☐ Thick Dark Surface (A12)
- ☐ Sandy Mucky Mineral (S1)
- ☐ Sandy Gleyed Matrix (S4)
- ☐ Sandy Redox (S5)
- ☐ Stripped Matrix (S6)
- ☐ Loamy Mucky Mineral (F1) **(except MLRA 1)**
- ☐ Loamy Gleyed Matrix (F2)
- ☒ Depleted Matrix (F3)
- ☐ Redox Dark Surface (F6)
- ☐ Depleted Dark Surface (F7)
- ☐ Redox Depressions (F8)

Indicators for Problematic Hydric Soils[3]:

- ☐ 2 cm Muck (A10)
- ☐ Red Parent Material (TF2)
- ☐ Very Shallow Dark Surface (TF12)
- ☐ Other (Explain in Remarks)

[3]Indicators of hydrophytic vegetation and wetland hydrology must be present, unless disturbed or problematic.

Restrictive Layer (if present):

Type: _____

Depth (inches): _____

Hydric Soils Present? **Yes** ☒ **No** ☐

Remarks: 1 chroma with redox features

HYDROLOGY

Wetland Hydrology Indicators:

Primary Indicators (minimum of one required; check all that apply)

- ☐ Surface Water (A1)
- ☒ High Water Table (A2)
- ☒ Saturation (A3)
- ☒ Water Marks (B1)
- ☐ Sediment Deposits (B2)
- ☒ Drift Deposits (B3)
- ☐ Algal Mat or Crust (B4)
- ☐ Iron Deposits (B5)
- ☐ Surface Soil Cracks (B6)
- ☐ Inundation Visible on Aerial Imagery (B7)
- ☐ Sparsely Vegetated Concave Surface (B8)
- ☒ Water-Stained Leaves (B9) **(except MLRA 1, 2, 4A, and 4B)**
- ☐ Salt Crust (B11)
- ☐ Aquatic Invertebrates (B13)
- ☐ Hydrogen Sulfide Odor (C1)
- ☐ Oxidized Rhizospheres along Living Roots (C3)
- ☐ Presence of Reduced Iron (C4)
- ☐ Recent Iron Reduction in Tilled Soils (C6)
- ☐ Stunted or Stresses Plants (D1) **(LRR A)**
- ☐ Other (Explain in Remarks)

Secondary Indicators (2 or more required)

- ☐ Water-Stained Leaves (B9) **(MLRA 1, 2, 4A, and 4B)**
- ☐ Drainage Patterns (B10)
- ☐ Dry-Season Water Table (C2)
- ☐ Saturation Visible on Aerial Imagery (C9)
- ☐ Geomorphic Position (D2)
- ☐ Shallow Aquitard (D3)
- ☐ FAC-Neutral Test (D5)
- ☐ Raised Ant Mounds (D6) **(LRR A)**
- ☐ Frost-Heave Hummocks (D7)

Field Observations:

Surface Water Present?	Yes	☐	No	☒	Depth (inches):	
Water Table Present?	Yes	☒	No	☐	Depth (inches):	11 inches
Saturation Present? (includes capillary fringe)	Yes	☒	No	☐	Depth (inches):	at surface

Wetland Hydrology Present? **Yes** ☒ **No** ☐

Describe Recorded Data (stream gauge, monitoring well, aerial photos, previous inspections), if available:

Remarks: Saturation and water table observed in sample plot

WETLAND DETERMINATION DATA FORM – Western Mountains, Valleys, and Coast Region

Project Site: Padden Creek Daylighting Project | City/County: Bellingham/Whatcom | Sampling Date: February 13, 2012

Applicant/Owner: City of Bellingham | State: WA | Sampling Point: Wet A SP4Up

Investigator(s): C Douglas & A Spooner | Section, Township, Range: S12, T37N, R2E

Landform (hillslope, terrace, etc.): Associated Stream Channel | Local relief (concave, convex, none): concave | Slope (%): 0% to 2%

Subregion (LRR): A | Lat: 47.69N | Long: 122.62W | Datum: _____

Soil Map Unit Name: Everett Urban Land | NWI classification: None Mapped

Are climatic / hydrologic conditions on the site typical for this time of year? Yes ☒ No ☐ (If no, explain in Remarks.)

Are Vegetation ☐, Soil ☐, or Hydrology ☐, significantly disturbed? Are "Normal Circumstances" present? Yes ☒ No ☐

Are Vegetation ☐, Soil ☐, or Hydrology ☐, naturally problematic? (If needed, explain any answers in Remarks.)

SUMMARY OF FINDINGS – Attach site map showing sampling point locations, transects, important features, etc.

Hydrophytic Vegetation Present?	Yes ☐	No ☒	**Is the Sampled Area within a Wetland?**	**Yes ☐ No ☒**
Hydric Soil Present?	Yes ☐	No ☒		
Wetland Hydrology Present?	Yes ☐	No ☒		

Remarks: Wetland A is located within Fairhaven Park and is associated with a stream channel. Residential development, roads, park trails and parking areas are located in close proximity to the wetland. Wetland is hydrologically connected to Wetland B through culverts beneathe a walking bridge. No flow was occuring between the wetlands during the investigation. Wetland includesdepressional, riverine, and slope HGM classes.

VEGETATION – Use scientific names of plants

Tree Stratum (Plot size: 30 foot radius)	Absolute % Cover	Dominant Species?	Indicator Status
1. *Prunus emarginata*	30	yes	FACU
2.			
3.			
4.			
50% = 1, 20% = 0	30	= Total Cover	
Sapling/Shrub Stratum (Plot size: 15 foot radius)			
1. *Corylus cornuta*	40	yes	FACU
2. *Oemleria cerasiformis*	10	no	FACU
3. *Rosa nutkana*	15	no	FAC
4. *Rubus armeniacus*	35	yes	FACU
5. *Symphiocarpus albus*	10	no	FACU
50% = 2, 20% = 0	100	= Total Cover	
Herb Stratum (Plot size: 3 foot radius)			
1. *Polystichum munitum*	50	yes	FACU
2.			
3.			
4.			
5.			
6.			
7.			
8.			
9.			
10.			
11.			
50% = 1, 20% = 0	50	= Total Cover	
Woody Vine Stratum (Plot size: 3 foot radius)			
1.			
2.			
50% = _____, 20% = _____	0	= Total Cover	

% Bare Ground in Herb Stratum 50

Dominance Test Worksheet:

Number of Dominant Species That Are OBL, FACW, or FAC:	0	(A)
Total Number of Dominant Species Across All Strata:	4	(B)
Percent of Dominant Species That Are OBL, FACW, or FAC:	0	(A/B)

Prevalence Index worksheet:

Total % Cover of:		Multiply by:	
OBL species		x1 =	
FACW species		x2 =	
FAC species		x3 =	
FACU species		x4 =	
UPL species		x5 =	
Column Totals:	(A)		(B)

Prevalence Index = B/A = _____

Hydrophytic Vegetation Indicators:

- ☐ 1 – Rapid Test for Hydrophytic Vegetation
- ☐ 2 - Dominance Test is >50%
- ☐ 3 - Prevalence Index is ≤3.0[1]
- ☐ 4 - Morphological Adaptations[1] (Provide supporting data in Remarks or on a separate sheet)
- ☐ 5 - Wetland Non-Vascular Plants[1]
- ☐ Problematic Hydrophytic Vegetation[1] (Explain)

[1]Indicators of hydric soil and wetland hydrology must be present, unless disturbed or problematic.

Hydrophytic Vegetation Present? **Yes ☐ No ☒**

Remarks: 0% dominant wetland vegetation per the Dominance Test

Project Site: Padden Creek Daylighting Project

SOIL

Sampling Point: Wet A SP4Up

Profile Description: (Describe to the depth needed to document the indicator or confirm the absence of indicators.)

Depth	Matrix		Redox Features					
(inches)	Color (moist)	%	Color (moist)	%	Type[1]	Loc[2]	Texture	Remarks
0 to 8	10YR 4/2	100	None	None	None	None	Clay loam	
8 to 18+	10YR 5/2	60	10YR 6/6	40	D	M	Clay loam	

[1]Type: C= Concentration, D=Depletion, RM=Reduced Matrix, CS=Covered or Coated Sand Grains. [2]Location: PL=Pore Lining, M=Matrix

Hydric Soil Indicators: (Applicable to all LRRs, unless otherwise noted.)

- ☐ Histosol (A1)
- ☐ Histic Epipedon (A2)
- ☐ Black Histic (A3)
- ☐ Hydrogen Sulfide (A4)
- ☐ Depleted Below Dark Surface (A11)
- ☐ Thick Dark Surface (A12)
- ☐ Sandy Mucky Mineral (S1)
- ☐ Sandy Gleyed Matrix (S4)
- ☐ Sandy Redox (S5)
- ☐ Stripped Matrix (S6)
- ☐ Loamy Mucky Mineral (F1) **(except MLRA 1)**
- ☐ Loamy Gleyed Matrix (F2)
- ☒ Depleted Matrix (F3)
- ☐ Redox Dark Surface (F6)
- ☐ Depleted Dark Surface (F7)
- ☐ Redox Depressions (F8)

Indicators for Problematic Hydric Soils[3]:

- ☐ 2 cm Muck (A10)
- ☐ Red Parent Material (TF2)
- ☐ Very Shallow Dark Surface (TF12)
- ☐ Other (Explain in Remarks)

[3]Indicators of hydrophytic vegetation and wetland hydrology must be present, unless disturbed or problematic.

Restrictive Layer (if present):

Type: _____

Depth (inches): _____

Hydric Soils Present? **Yes** ☐ **No** ☒

Remarks: 2 chroma with redox features below 8 inches, appears to be relic floodplain soils in lower depths

HYDROLOGY

Wetland Hydrology Indicators:

Primary Indicators (minimum of one required; check all that apply)

- ☐ Surface Water (A1)
- ☐ High Water Table (A2)
- ☐ Saturation (A3)
- ☐ Water Marks (B1)
- ☐ Sediment Deposits (B2)
- ☐ Drift Deposits (B3)
- ☐ Algal Mat or Crust (B4)
- ☐ Iron Deposits (B5)
- ☐ Surface Soil Cracks (B6)
- ☐ Inundation Visible on Aerial Imagery (B7)
- ☐ Sparsely Vegetated Concave Surface (B8)
- ☐ Water-Stained Leaves (B9) **(except MLRA 1, 2, 4A, and 4B)**
- ☐ Salt Crust (B11)
- ☐ Aquatic Invertebrates (B13)
- ☐ Hydrogen Sulfide Odor (C1)
- ☐ Oxidized Rhizospheres along Living Roots (C3)
- ☐ Presence of Reduced Iron (C4)
- ☐ Recent Iron Reduction in Tilled Soils (C6)
- ☐ Stunted or Stresses Plants (D1) **(LRR A)**
- ☐ Other (Explain in Remarks)

Secondary Indicators (2 or more required)

- ☐ Water-Stained Leaves (B9) **(MLRA 1, 2, 4A, and 4B)**
- ☐ Drainage Patterns (B10)
- ☐ Dry-Season Water Table (C2)
- ☐ Saturation Visible on Aerial Imagery (C9)
- ☐ Geomorphic Position (D2)
- ☐ Shallow Aquitard (D3)
- ☐ FAC-Neutral Test (D5)
- ☐ Raised Ant Mounds (D6) **(LRR A)**
- ☐ Frost-Heave Hummocks (D7)

Field Observations:

Surface Water Present?	Yes	☐	No	☒	Depth (inches):	
Water Table Present?	Yes	☐	No	☒	Depth (inches):	
Saturation Present? (includes capillary fringe)	Yes	☐	No	☒	Depth (inches):	

Wetland Hydrology Present? **Yes** ☐ **No** ☒

Describe Recorded Data (stream gauge, monitoring well, aerial photos, previous inspections), if available:

Remarks: No saturation or water table observed in sample plot

WETLAND DETERMINATION DATA FORM – Western Mountains, Valleys, and Coast Region

Project Site: Padden Creek Daylighting Project | City/County: Bellingham/Whatcom | Sampling Date: February 13, 2012

Applicant/Owner: City of Bellingham | State: WA | Sampling Point: Wet B SP5Wet

Investigator(s): C Douglas & A Spooner | Section, Township, Range: S12, T37N, R2E

Landform (hillslope, terrace, etc.): Depression | Local relief (concave, convex, none): concave | Slope (%): 0% to 2%

Subregion (LRR): A | Lat: 47.69N | Long: 122.62W | Datum: _____

Soil Map Unit Name: Everett Urban Land | NWI classification: None Mapped

Are climatic / hydrologic conditions on the site typical for this time of year? Yes ☒ No ☐ (If no, explain in Remarks.)

Are Vegetation ☐, Soil ☐, or Hydrology ☐, significantly disturbed? Are "Normal Circumstances" present? Yes ☒ No ☐

Are Vegetation ☐, Soil ☐, or Hydrology ☐, naturally problematic? (If needed, explain any answers in Remarks.)

SUMMARY OF FINDINGS – Attach site map showing sampling point locations, transects, important features, etc.

Hydrophytic Vegetation Present?	Yes	☒	No	☐	
Hydric Soil Present?	Yes	☒	No	☐	**Is the Sampled Area within a Wetland?** **Yes** ☒ **No** ☐
Wetland Hydrology Present?	Yes	☒	No	☐	

Remarks: Wetland B is located within Fairhaven Park. Residential development, roads, park trails and parking areas are located in close proximity to the wetland. Wetland is hydrologically connected to Wetland A and an associated stream channel through culverts beneathe a walking bridge. No flow was occuring between the wetlands during the investigation. Wetland includesdepressional HGM class.

VEGETATION – Use scientific names of plants

Tree Stratum (Plot size: 30 foot radius)	Absolute % Cover	Dominant Species?	Indicator Status
1. *Prunus emarginata*	15	yes	FACU
2. *Salix lasiandra*	20	yes	FACW
3. *Salix lasiandra*			
4.			
50% = 1, 20% = 1	35	= Total Cover	
Sapling/Shrub Stratum (Plot size: 15 foot radius)			
1. *Rubus armeniacus*	25	yes	FACU
2. *Spiraea douglasii*	60	yes	FACW
3.			
4.			
5.			
50% = 2, 20% = 0	85	= Total Cover	
Herb Stratum (Plot size: 3 foot radius)			
1. *Equisetum arvense*	20	yes	FAC
2. *Ranunculus repens*	40	yes	FACW
3.			
4.			
5.			
6.			
7.			
8.			
9.			
10.			
11.			
50% = 1, 20% = 1	60	= Total Cover	
Woody Vine Stratum (Plot size: 3 foot radius)			
1.			
2.			
50% = _____, 20% = _____	0	= Total Cover	

% Bare Ground in Herb Stratum 40

Dominance Test Worksheet:

Number of Dominant Species That Are OBL, FACW, or FAC: 4 (A)

Total Number of Dominant Species Across All Strata: 6 (B)

Percent of Dominant Species That Are OBL, FACW, or FAC: 67 (A/B)

Prevalence Index worksheet:

Total % Cover of:		Multiply by:	
OBL species		x1 =	
FACW species		x2 =	
FAC species		x3 =	
FACU species		x4 =	
UPL species		x5 =	
Column Totals:	(A)		(B)

Prevalence Index = B/A = _____

Hydrophytic Vegetation Indicators:

- ☐ 1 – Rapid Test for Hydrophytic Vegetation
- ☒ 2 - Dominance Test is >50%
- ☐ 3 - Prevalence Index is ≤3.0[1]
- ☐ 4 - Morphological Adaptations[1] (Provide supporting data in Remarks or on a separate sheet)
- ☐ 5 - Wetland Non-Vascular Plants[1]
- ☐ Problematic Hydrophytic Vegetation[1] (Explain)

[1]Indicators of hydric soil and wetland hydrology must be present, unless disturbed or problematic.

Hydrophytic Vegetation Present? **Yes** ☒ **No** ☐

Remarks: 67% dominant wetland vegetation per the Dominance Test

Project Site: Padden Creek Daylighting Project

SOIL

Sampling Point: Wet B SP5Wet

Profile Description: (Describe to the depth needed to document the indicator or confirm the absence of indicators.)

Depth	Matrix		Redox Features					
(inches)	Color (moist)	%	Color (moist)	%	Type[1]	Loc[2]	Texture	Remarks
0 to 18+	10YR 4/1	80	10YR 6/4	20	D	M	Clay loam	w/gravel

[1]Type: C= Concentration, D=Depletion, RM=Reduced Matrix, CS=Covered or Coated Sand Grains. [2]Location: PL=Pore Lining, M=Matrix

Hydric Soil Indicators: (Applicable to all LRRs, unless otherwise noted.)

- ☐ Histosol (A1)
- ☐ Histic Epipedon (A2)
- ☐ Black Histic (A3)
- ☐ Hydrogen Sulfide (A4)
- ☐ Depleted Below Dark Surface (A11)
- ☐ Thick Dark Surface (A12)
- ☐ Sandy Mucky Mineral (S1)
- ☐ Sandy Gleyed Matrix (S4)
- ☐ Sandy Redox (S5)
- ☐ Stripped Matrix (S6)
- ☐ Loamy Mucky Mineral (F1) **(except MLRA 1)**
- ☐ Loamy Gleyed Matrix (F2)
- ☒ Depleted Matrix (F3)
- ☐ Redox Dark Surface (F6)
- ☐ Depleted Dark Surface (F7)
- ☐ Redox Depressions (F8)

Indicators for Problematic Hydric Soils[3]:

- ☐ 2 cm Muck (A10)
- ☐ Red Parent Material (TF2)
- ☐ Very Shallow Dark Surface (TF12)
- ☐ Other (Explain in Remarks)

[3]Indicators of hydrophytic vegetation and wetland hydrology must be present, unless disturbed or problematic.

Restrictive Layer (if present):

Type: ____

Depth (inches): ____

Hydric Soils Present? **Yes** ☒ **No** ☐

Remarks: 1 chroma with redox features

HYDROLOGY

Wetland Hydrology Indicators:

Primary Indicators (minimum of one required; check all that apply)

- ☒ Surface Water (A1)
- ☒ High Water Table (A2)
- ☒ Saturation (A3)
- ☒ Water Marks (B1)
- ☐ Sediment Deposits (B2)
- ☐ Drift Deposits (B3)
- ☐ Algal Mat or Crust (B4)
- ☐ Iron Deposits (B5)
- ☐ Surface Soil Cracks (B6)
- ☐ Inundation Visible on Aerial Imagery (B7)
- ☐ Sparsely Vegetated Concave Surface (B8)
- ☒ Water-Stained Leaves (B9) **(except MLRA 1, 2, 4A, and 4B)**
- ☐ Salt Crust (B11)
- ☐ Aquatic Invertebrates (B13)
- ☐ Hydrogen Sulfide Odor (C1)
- ☐ Oxidized Rhizospheres along Living Roots (C3)
- ☐ Presence of Reduced Iron (C4)
- ☐ Recent Iron Reduction in Tilled Soils (C6)
- ☐ Stunted or Stresses Plants (D1) **(LRR A)**
- ☐ Other (Explain in Remarks)

Secondary Indicators (2 or more required)

- ☐ Water-Stained Leaves (B9) **(MLRA 1, 2, 4A, and 4B)**
- ☐ Drainage Patterns (B10)
- ☐ Dry-Season Water Table (C2)
- ☐ Saturation Visible on Aerial Imagery (C9)
- ☐ Geomorphic Position (D2)
- ☐ Shallow Aquitard (D3)
- ☐ FAC-Neutral Test (D5)
- ☐ Raised Ant Mounds (D6) **(LRR A)**
- ☐ Frost-Heave Hummocks (D7)

Field Observations:

Surface Water Present?	Yes	☒	No	☐	Depth (inches):	____
Water Table Present?	Yes	☒	No	☐	Depth (inches):	at surface
Saturation Present? (includes capillary fringe)	Yes	☒	No	☐	Depth (inches):	at surface

Wetland Hydrology Present? **Yes** ☒ **No** ☐

Describe Recorded Data (stream gauge, monitoring well, aerial photos, previous inspections), if available:

Remarks: Saturation and water table observed in sample plot

WETLAND DETERMINATION DATA FORM – Western Mountains, Valleys, and Coast Region

Project Site: Padden Creek Daylighting Project City/County: Bellingham/Whatcom Sampling Date: February 13, 2012

Applicant/Owner: City of Bellingham State: WA Sampling Point: Wet B SP6Up

Investigator(s): C Douglas & A Spooner Section, Township, Range: S12, T37N, R2E

Landform (hillslope, terrace, etc.): Depression Local relief (concave, convex, none): concave Slope (%): 0% to 2%

Subregion (LRR): A Lat: 47.69N Long: 122.62W Datum: _____

Soil Map Unit Name: Everett Urban Land NWI classification: None Mapped

Are climatic / hydrologic conditions on the site typical for this time of year? Yes ☒ No ☐ (If no, explain in Remarks.)

Are Vegetation ☐, Soil ☐, or Hydrology ☐, significantly disturbed? Are "Normal Circumstances" present? Yes ☒ No ☐

Are Vegetation ☐, Soil ☐, or Hydrology ☐, naturally problematic? (If needed, explain any answers in Remarks.)

SUMMARY OF FINDINGS – Attach site map showing sampling point locations, transects, important features, etc.

Hydrophytic Vegetation Present?	Yes ☐	No ☒	**Is the Sampled Area within a Wetland?**	**Yes** ☐	**No** ☒
Hydric Soil Present?	Yes ☐	No ☒			
Wetland Hydrology Present?	Yes ☐	No ☒			

Remarks: Wetland B is located within Fairhaven Park. Residential development, roads, park trails and parking areas are located in close proximity to the wetland. Wetland is hydrologically connected to Wetland A and an associated stream channel through culverts beneathe a walking bridge. No flow was occuring between the wetlands during the investigation. Wetland includesdepressional HGM class.

VEGETATION – Use scientific names of plants

Tree Stratum (Plot size: 30 foot radius)	Absolute % Cover	Dominant Species?	Indicator Status
1. *Populus trichocarpa*	10	yes	FAC
2. *Prunus emarginata*	30	yes	FACU
3.			
4.			
50% = 1, 20% = 1	40	= Total Cover	
Sapling/Shrub Stratum (Plot size: 15 foot radius)			
1. *Corylus cornuta*	30	yes	FACU
2. *Ilex aquifolium*	40	yes	FACU
3. *Rubus armeniacus*	40	yes	FACU
4. *Rubus ursinus*	20	no	FACU
5.			
50% = 0, 20% = 3	100	= Total Cover	
Herb Stratum (Plot size: 3 foot radius)			
1. *Polystichum munitum*	20	yes	FACU
2. *Pteridium aquilinum*	20	yes	FACU
3.			
4.			
5.			
6.			
7.			
8.			
9.			
10.			
11.			
50% = 2, 20% = 0	40	= Total Cover	
Woody Vine Stratum (Plot size: 3 foot radius)			
1. *Hedera hibernica*	20	yes	UPL
2.			
50% = 1, 20% = 0	0	= Total Cover	

% Bare Ground in Herb Stratum 40

Dominance Test Worksheet:

Number of Dominant Species That Are OBL, FACW, or FAC:	1	(A)
Total Number of Dominant Species Across All Strata:	8	(B)
Percent of Dominant Species That Are OBL, FACW, or FAC:	13	(A/B)

Prevalence Index worksheet:

Total % Cover of:		Multiply by:	
OBL species		x1 =	
FACW species		x2 =	
FAC species		x3 =	
FACU species		x4 =	
UPL species		x5 =	
Column Totals:	(A)		(B)

Prevalence Index = B/A = _____

Hydrophytic Vegetation Indicators:

- ☐ 1 – Rapid Test for Hydrophytic Vegetation
- ☒ 2 - Dominance Test is >50%
- ☐ 3 - Prevalence Index is ≤3.0[1]
- ☐ 4 - Morphological Adaptations[1] (Provide supporting data in Remarks or on a separate sheet)
- ☐ 5 - Wetland Non-Vascular Plants[1]
- ☐ Problematic Hydrophytic Vegetation[1] (Explain)

[1]Indicators of hydric soil and wetland hydrology must be present, unless disturbed or problematic.

Hydrophytic Vegetation Present? **Yes** ☐ **No** ☒

Remarks: 13% dominant wetland vegetation per the Dominance Test

Project Site: Padden Creek Daylighting Project

SOIL

Sampling Point: Wet B SP6Up

Profile Description: (Describe to the depth needed to document the indicator or confirm the absence of indicators.)

Depth	Matrix		Redox Features					
(inches)	Color (moist)	%	Color (moist)	%	Type[1]	Loc[2]	Texture	Remarks
0 to 10	10YR 4/2	100	None	None	None	None	Clay loam	
10 to 18+	10YR 6/4	100	None	None	None	None	Clay loam	

[1]Type: C= Concentration, D=Depletion, RM=Reduced Matrix, CS=Covered or Coated Sand Grains. [2]Location: PL=Pore Lining, M=Matrix

Hydric Soil Indicators: (Applicable to all LRRs, unless otherwise noted.)

- ☐ Histosol (A1)
- ☐ Histic Epipedon (A2)
- ☐ Black Histic (A3)
- ☐ Hydrogen Sulfide (A4)
- ☐ Depleted Below Dark Surface (A11)
- ☐ Thick Dark Surface (A12)
- ☐ Sandy Mucky Mineral (S1)
- ☐ Sandy Gleyed Matrix (S4)
- ☐ Sandy Redox (S5)
- ☐ Stripped Matrix (S6)
- ☐ Loamy Mucky Mineral (F1) **(except MLRA 1)**
- ☐ Loamy Gleyed Matrix (F2)
- ☐ Depleted Matrix (F3)
- ☐ Redox Dark Surface (F6)
- ☐ Depleted Dark Surface (F7)
- ☐ Redox Depressions (F8)

Indicators for Problematic Hydric Soils[3]:

- ☐ 2 cm Muck (A10)
- ☐ Red Parent Material (TF2)
- ☐ Very Shallow Dark Surface (TF12)
- ☐ Other (Explain in Remarks)

[3]Indicators of hydrophytic vegetation and wetland hydrology must be present, unless disturbed or problematic.

Restrictive Layer (if present):

Type: _____

Depth (inches): _____

Hydric Soils Present? **Yes** ☐ **No** ☒

Remarks: 2 and 4 chroma with no redox features

HYDROLOGY

Wetland Hydrology Indicators:

Primary Indicators (minimum of one required; check all that apply)

- ☐ Surface Water (A1)
- ☐ High Water Table (A2)
- ☐ Saturation (A3)
- ☐ Water Marks (B1)
- ☐ Sediment Deposits (B2)
- ☐ Drift Deposits (B3)
- ☐ Algal Mat or Crust (B4)
- ☐ Iron Deposits (B5)
- ☐ Surface Soil Cracks (B6)
- ☐ Inundation Visible on Aerial Imagery (B7)
- ☐ Sparsely Vegetated Concave Surface (B8)
- ☐ Water-Stained Leaves (B9) **(except MLRA 1, 2, 4A, and 4B)**
- ☐ Salt Crust (B11)
- ☐ Aquatic Invertebrates (B13)
- ☐ Hydrogen Sulfide Odor (C1)
- ☐ Oxidized Rhizospheres along Living Roots (C3)
- ☐ Presence of Reduced Iron (C4)
- ☐ Recent Iron Reduction in Tilled Soils (C6)
- ☐ Stunted or Stresses Plants (D1) **(LRR A)**
- ☐ Other (Explain in Remarks)

Secondary Indicators (2 or more required)

- ☐ Water-Stained Leaves (B9) **(MLRA 1, 2, 4A, and 4B)**
- ☐ Drainage Patterns (B10)
- ☐ Dry-Season Water Table (C2)
- ☐ Saturation Visible on Aerial Imagery (C9)
- ☐ Geomorphic Position (D2)
- ☐ Shallow Aquitard (D3)
- ☐ FAC-Neutral Test (D5)
- ☐ Raised Ant Mounds (D6) **(LRR A)**
- ☐ Frost-Heave Hummocks (D7)

Field Observations:

Surface Water Present? Yes ☐ No ☒ Depth (inches): _____

Water Table Present? Yes ☐ No ☒ Depth (inches): _____

Saturation Present? (includes capillary fringe) Yes ☐ No ☒ Depth (inches): _____

Wetland Hydrology Present? **Yes** ☐ **No** ☒

Describe Recorded Data (stream gauge, monitoring well, aerial photos, previous inspections), if available:

Remarks: No saturation or water table observed in sample plot

APPENDIX D
ECOLOGY WETLAND RATING FORMS

Wetland name or number A

WETLAND RATING FORM – WESTERN WASHINGTON
Version 2 - Updated July 2006 to increase accuracy and reproducibility among users
Updated Oct 2008 with the new WDFW definitions for priority habitats

Name of wetland (if known): Wetland A Date of site visit: 2/13/2012

Rated by C. Douglas & A. Spooner Trained by Ecology? Yes X No___ Date of training May 2007

SEC: 26 TWNSHP: 37N RNGE: 2E Is S/T/R in Appendix D? Yes___ No X

Map of wetland unit: Figure ____ Estimated size _____

SUMMARY OF RATING

Category based on FUNCTIONS provided by wetland

I___ II___ III X IV___

Category I = Score >=70
Category II = Score 51-69
Category III = Score 30-50
Category IV = Score < 30

Score for Water Quality Functions	16
Score for Hydrologic Functions	6
Score for Habitat Functions	21
TOTAL score for Functions	43

Category based on SPECIAL CHARACTERISTICS of wetland

I___ II___ Does not Apply X

Final Category (choose the "highest" category from above)

III

Summary of basic information about the wetland unit

Wetland Unit has Special Characteristics		Wetland HGM Class used for Rating	
Estuarine		**Depressional**	X
Natural Heritage Wetland		**Riverine**	X
Bog		**Lake-fringe**	
Mature Forest		**Slope**	X
Old Growth Forest		**Flats**	
Coastal Lagoon		**Freshwater Tidal**	
Interdunal			
None of the above	X	Check if unit has multiple HGM classes present	X

Wetland name or number A

Does the wetland unit being rated meet any of the criteria below?

If you answer YES to any of the questions below you will need to protect the wetland according to the regulations regarding the special characteristics found in the wetland.

Check List for Wetlands That May Need Additional Protection (in addition to the protection recommended for its category)	YES	NO
SP1. *Has the wetland unit been documented as a habitat for any Federally listed Threatened or Endangered **animal or plant** species (T/E species)?* For the purposes of this rating system, "documented" means the wetland is on the appropriate state or federal database.	X	
SP2. *Has the wetland unit been documented as habitat for any State listed Threatened or Endangered **animal** species?* For the purposes of this rating system, "documented" means the wetland is on the appropriate state database. Note: Wetlands with State listed plant species are categorized as Category I Natural Heritage Wetlands (see p. 19 of data form).	X	
SP3. *Does the wetland unit contain individuals of Priority species listed by the WDFW for the state?*	X	
SP4. *Does the wetland unit have a local significance in addition to its functions*? For example, the wetland has been identified in the Shoreline Master Program, the Critical Areas Ordinance, or in a local management plan as having special significance.		X

To complete the next part of the data sheet you will need to determine the Hydrogeomorphic Class of the wetland being rated.

The hydrogeomorphic classification groups wetlands into those that function in similar ways. This simplifies the questions needed to answer how well the wetland functions. The Hydrogeomorphic Class of a wetland can be determined using the key below. See p. 24 for more detailed instructions on classifying wetlands.

Wetland name or number A

Classification of Wetland Units in Western Washington

If the hydrologic criteria listed in each question do not apply to the entire unit being rated, you probably have a unit with multiple HGM classes. In this case, identify which hydrologic criteria in questions 1-7 apply, and go to Question 8.

1. Are the water levels in the entire unit usually controlled by tides (i.e. except during floods)?

NO – go to 2 **YES** – the wetland class is **Tidal Fringe**

If yes, is the salinity of the water during periods of annual low flow below 0.5 ppt (parts per thousand)? **YES – Freshwater Tidal Fringe NO – Saltwater Tidal Fringe (Estuarine)**

*If your wetland can be classified as a Freshwater Tidal Fringe use the forms for **Riverine** wetlands. If it is Saltwater Tidal Fringe it is rated as an **Estuarine** wetland.* Wetlands that were called estuarine in the first and second editions of the rating system are called Salt Water Tidal Fringe in the Hydrogeomorphic Classification. Estuarine wetlands were categorized separately in the earlier editions, and this separation is being kept in this revision. To maintain consistency between editions, the term "Estuarine" wetland is kept. Please note, however, that the characteristics that define Category I and II estuarine wetlands have changed (see p.).

2. The entire wetland unit is flat and precipitation is the only source (>90%) of water to it. Groundwater and surface water runoff are NOT sources of water to the unit.

NO – go to 3 **YES** – The wetland class is **Flats**

If your wetland can be classified as a "Flats" wetland, use the form for **Depressional** wetlands.

3. Does the entire wetland unit **meet both** of the following criteria?

___The vegetated part of the wetland is on the shores of a body of permanent open water (without any vegetation on the surface) at least 20 acres (8 ha) in size;

___At least 30% of the open water area is deeper than 6.6 ft (2 m)?

NO – go to 4 **YES –** The wetland class is **Lake-fringe (Lacustrine Fringe)**

4. Does the entire wetland unit **meet all** of the following criteria?

_X_The wetland is on a slope (*slope can be very gradual*),

_X_The water flows through the wetland in one direction (unidirectional) and usually comes from seeps. It may flow subsurface, as sheetflow, or in a swale without distinct banks.

_X_The water leaves the wetland **without being impounded**?

NOTE: *Surface water does not pond in these type of wetlands except occasionally in very small and shallow depressions or behind hummocks (depressions are usually <3ft diameter and less than 1 foot deep).*

NO - go to 5 **YES –** The wetland class is **Slope**

5. Does the entire wetland unit **meet all** of the following criteria?

_X_ The unit is in a valley, or stream channel, where it gets inundated by overbank flooding from that stream or river

_X_ The overbank flooding occurs at least once every two years.

NOTE: The riverine unit can contain depressions that are filled with water when the river is not flooding.

NO - go to 6 **YES** – The wetland class is **Riverine**

6. Is the entire wetland unit in a topographic depression in which water ponds, or is saturated to the surface, at some time during the year. *This means that any outlet, if present, is higher than the interior of the wetland.*

NO – go to 7 **YES –** The wetland class is **Depressional**

7. Is the entire wetland unit located in a very flat area with no obvious depression and no overbank flooding. The unit does not pond surface water more than a few inches. The unit seems to be maintained by high groundwater in the area. The wetland may be ditched, but has no obvious natural outlet.

NO – go to 8 **YES** – The wetland class is **Depressional**

8. Your wetland unit seems to be difficult to classify and probably contains several different HGM clases. For example, seeps at the base of a slope may grade into a riverine floodplain, or a small stream within a depressional wetland has a zone of flooding along its sides. GO BACK AND IDENTIFY WHICH OF THE HYDROLOGIC REGIMES DESCRIBED IN QUESTIONS 1-7 APPLY TO DIFFERENT AREAS IN THE UNIT (make a rough sketch to help you decide). Use the following table to identify the appropriate class to use for the rating system if you have several HGM classes present within your wetland. NOTE: Use this table only if the class that is recommended in the second column represents 10% or more of the total area of the wetland unit being rated. If the area of the class listed in column 2 is less than 10% of the unit; classify the wetland using the class that represents more than 90% of the total area.

HGM Classes within the wetland unit being rated	*HGM Class to Use in Rating*
Slope + Riverine	Riverine
Slope + Depressional	Depressional
Slope + Lake-fringe	Lake-fringe
Depressional + Riverine along stream within boundary	Depressional
Depressional + Lake-fringe	Depressional
Salt Water Tidal Fringe and any other class of freshwater wetland	Treat as ESTUARINE under wetlands with special characteristics

If you are unable still to determine which of the above criteria apply to your wetland, or if you have more than 2 HGM classes within a wetland boundary, classify the wetland as **Depressional** for the rating.

Wetland name or number A

D	**Depressional and Flats Wetlands** **WATER QUALITY FUNCTIONS** - Indicators that the wetland unit functions to improve water quality	**Points** (only 1 score per box)
D	**D 1. Does the wetland unit have the potential to improve water quality?**	***(see p.38)***
D	D 1.1 Characteristics of surface water flows out of the wetland: Unit is a depression with no surface water leaving it (no outlet) points = 3 Unit has an intermittently flowing, OR highly constricted permanently flowing outlet points = 2 Unit has an unconstricted, or slightly constricted, surface outlet (*permanently flowing*) points = 1 Unit is a "flat" depression (Q. 7 on key), or in the Flats class, with permanent surface outflow **and no obvious natural outlet** and/or outlet is a man-made ditch points = 1 (*If ditch is not permanently flowing treat unit as "intermittently flowing"*) Provide photo or drawing	**Figure** ___ 1
D	S 1.2 The soil 2 inches below the surface (or duff layer) is clay or organic *(use NRCS definitions)* YES points = 4 NO points = 0	4
D	D 1.3 Characteristics of persistent vegetation (emergent, shrub, and/or forest Cowardin class) Wetland has persistent, ungrazed, vegetation > = 95% of area points = 5 Wetland has persistent, ungrazed, vegetation > = 1/2 of area points = 3 Wetland has persistent, ungrazed vegetation > = 1/10 of area points = 1 Wetland has persistent, ungrazed vegetation <1/10 of area points = 0 Map of Cowardin vegetation classes	**Figure** ___ 3
D	D1.4 Characteristics of seasonal ponding or inundation. *This is the area of the wetland unit that is ponded for at least 2 months, but dries out sometime during the year. Do not count the area that is permanently ponded. Estimate area as the average condition 5 out of 10 yrs.* Area seasonally ponded is > ½ total area of wetland points = 4 Area seasonally ponded is > ¼ total area of wetland points = 2 Area seasonally ponded is < ¼ total area of wetland points = 0 Map of Hydroperiods	**Figure** ___ 0
D	**Total for D 1** *Add the points in the boxes above*	8
D	**D 2. Does the wetland unit have the opportunity to improve water quality?** Answer YES if you know or believe there are pollutants in groundwater or surface water coming into the wetland that would otherwise reduce water quality in streams, lakes or groundwater downgradient from the wetland. *Note which of the following conditions provide the sources of pollutants. A unit may have pollutants coming from several sources, but any single source would qualify as opportunity.* — Grazing in the wetland or within 150 ft X Untreated stormwater discharges to wetland — Tilled fields or orchards within 150 ft of wetland X A stream or culvert discharges into wetland that drains developed areas, residential areas, farmed fields, roads, or clear-cut logging — Residential, urban areas, golf courses are within 150 ft of wetland — Wetland is fed by groundwater high in phosphorus or nitrogen — Other_____ **YES** multiplier is **2** **NO** multiplier is **1**	***(see p. 44)*** multiplier 2
D	**TOTAL - Water Quality Functions** Multiply the score from D1 by D2 ***Add score to table on p. 1***	16

Wetland name or number A

D	**Depressional and Flats Wetlands** HYDROLOGIC FUNCTIONS - Indicators that the wetland unit functions to reduce flooding and stream degradation	**Points** (only 1 score per box)
	D 3. Does the wetland unit have the potential to reduce flooding and erosion?	***(see p.46)***
D	D 3.1 Characteristics of surface water flows out of the wetland unit Unit is a depression with no surface water leaving it (no outlet) points = 4 Unit has an intermittently flowing, OR highly constricted permanently flowing outlet points = 2 Unit is a "flat" depression (Q. 7 on key), or in the Flats class, with permanent surface outflow **and no obvious natural outlet** and/or outlet is a man-made ditch points = 1 (*If ditch is not permanently flowing treat unit as "intermittently flowing"*) Unit has an unconstricted, or slightly constricted, surface outlet (*permanently flowing*) points = 0	0
D	D 3.2 Depth of storage during wet periods *Estimate the height of ponding above the bottom of the outlet. For units with no outlet measure from the surface of permanent water or deepest part (if dry).* Marks of ponding are 3 ft or more above the surface or bottom of outlet points = 7 The wetland is a "headwater" wetland" points = 5 Marks of ponding between 2 ft to < 3 ft from surface or bottom of outlet points = 5 Marks are at least 0.5 ft to < 2 ft from surface or bottom of outlet points = 3 Unit is flat (yes to Q. 2 or Q. 7 on key) but has small depressions on the surface that trap water points = 1 Marks of ponding less than 0.5 ft points = 0	3
D	D 3.3 Contribution of wetland unit to storage in the watershed *Estimate the ratio of the area of upstream basin contributing surface water to the wetland to the area of the wetland unit itself.* The area of the basin is less than 10 times the area of unit points = 5 The area of the basin is 10 to 100 times the area of the unit points = 3 The area of the basin is more than 100 times the area of the unit points = 0 Entire unit is in the FLATS class points = 5	0
D	**Total for D 3** *Add the points in the boxes above*	3
D	**D 4. Does the wetland unit have the opportunity to reduce flooding and erosion?** Answer YES if the unit is in a location in the watershed where the flood storage, or reduction in water velocity, it provides helps protect downstream property and aquatic resources from flooding or excessive and/or erosive flows. Answer NO if the water coming into the wetland is controlled by a structure such as flood gate, tide gate, flap valve, reservoir etc. OR you estimate that more than 90% of the water in the wetland is from groundwater in areas where damaging groundwater flooding does not occur. *Note which of the following indicators of opportunity apply.* — Wetland is in a headwater of a river or stream that has flooding problems X Wetland drains to a river or stream that has flooding problems — Wetland has no outlet and impounds surface runoff water that might otherwise flow into a river or stream that has flooding problems — Other_____ **YES** multiplier is **2** **NO** multiplier is **1**	***(see p. 49)*** multiplier 2
D	**TOTAL - Hydrologic Functions** Multiply the score from D 3 by D 4 ***Add score to table on p. 1***	6

Wetland name or number A

These questions apply to wetlands of all HGM classes. HABITAT FUNCTIONS - Indicators that unit functions to provide important habitat	**Points** (only 1 score per box)
H 1. Does the wetland unit have the <u>potential</u> to provide habitat for many species?	
H 1.1 <u>Vegetation structure</u> ***(see p. 72)***	**Figure** ___
Check the types of vegetation classes present (as defined by Cowardin)- Size threshold for each class is ¼ acre or more than 10% of the area if unit is smaller than 2.5 acres. ____Aquatic bed _X_Emergent plants _X_Scrub/shrub (areas where shrubs have >30% cover) _X_Forested (areas where trees have >30% cover) *If the unit has a forested class check if:* ____The forested class has 3 out of 5 strata (canopy, sub-canopy, shrubs, herbaceous, moss/ground-cover) that each cover 20% within the forested polygon *Add the number of vegetation structures that qualify. If you have:* 4 structures or more points = 4 3 structures points = 2 2 structures points = 1 1 structure points = 0 Map of Cowardin vegetation classes	2
H 1.2. <u>Hydroperiods</u> ***(see p. 73)***	**Figure** ___
Check the types of water regimes (hydroperiods) present within the wetland. The water regime has to cover more than 10% of the wetland or ¼ acre to count. (see text for descriptions of hydroperiods) ____Permanently flooded or inundated _X_Seasonally flooded or inundated ____Occasionally flooded or inundated _X_Saturated only 4 or more types present points = 3 3 types present points = 2 2 types present point = 1 1 type present points = 0 _X_ Permanently flowing stream or river in, or adjacent to, the wetland ____ Seasonally flowing stream in, or adjacent to, the wetland ____ ***Lake-fringe wetland* = 2 points** ____***Freshwater tidal wetland* = 2 points** Map of hydroperiods	2
H 1.3. <u>Richness of Plant Species</u> ***(see p. 75)*** Count the number of plant species in the wetland that cover at least 10 ft^2. (*different patches of the same species can be combined to meet the size threshold)* *You do not have to name the species.* *Do not include Eurasian Milfoil, reed canarygrass, purple loosestrife, Canadian Thistle* If you counted: > 19 species points = 2 *List species below if you want to:* 5 - 19 species points = 1 < 5 species points = 0	1

Total for page 5

H 1.4. Interspersion of habitats ***(see p. 76)*** **Figure ___**

Decide from the diagrams below whether interspersion between Cowardin vegetation classes (described in H 1.1), or the classes and unvegetated areas (can include open water or mudflats) is high, medium, low, or none.

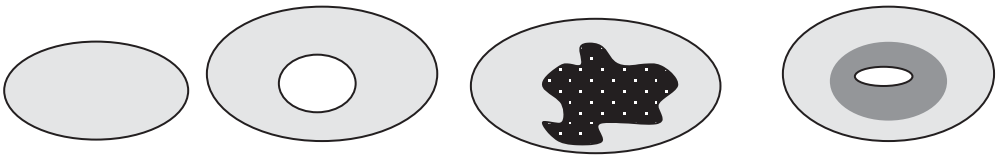

None = 0 points Low = 1 point Moderate = 2 points

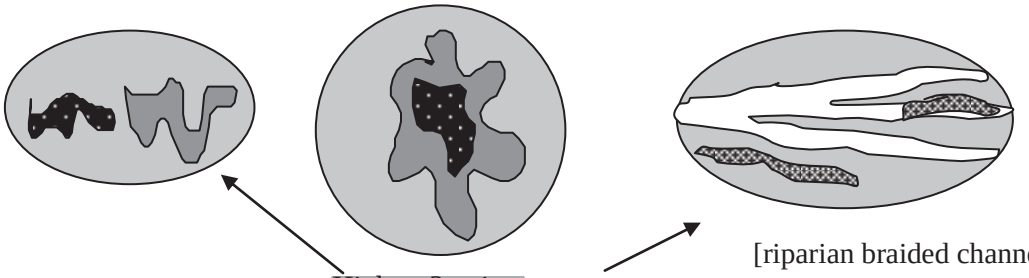

[riparian braided channels]

High = 3 points

NOTE: If you have four or more classes or three vegetation classes and open water the rating is always "high". Use map of Cowardin vegetation classes

3

H 1.5. Special Habitat Features: ***(see p. 77)***

Check the habitat features that are present in the wetland. The number of checks is the number of points you put into the next column.

_X_ Large, downed, woody debris within the wetland (>4in. diameter and 6 ft long).

____ Standing snags (diameter at the bottom > 4 inches) in the wetland

_X_ Undercut banks are present for at least 6.6 ft (2m) and/or overhanging vegetation extends at least 3.3 ft (1m) over a stream (or ditch) in, or contiguous with the unit, for at least 33 ft (10m)

____ Stable steep banks of fine material that might be used by beaver or muskrat for denning (>30degree slope) OR signs of recent beaver activity are present *(cut shrubs or trees that have not yet turned grey/brown)*

_X_ At least ¼ acre of thin-stemmed persistent vegetation or woody branches are present in areas that are permanently or seasonally inundated.*(structures for egg-laying by amphibians)*

____ Invasive plants cover less than 25% of the wetland area in each stratum of plants

NOTE: The 20% *stated in early printings of the manual on page 78 is an error.*

3

H 1. TOTAL Score - potential for providing habitat
Add the scores from H1.1, H1.2, H1.3, H1.4, H1.5

11

Comments

Wetland name or number A

H 2. Does the wetland unit have the opportunity to provide habitat for many species?	
H 2.1 Buffers ***(see p. 80)*** *Choose the description that best represents condition of buffer of wetland unit. The highest scoring criterion that applies to the wetland is to be used in the rating. See text for definition of "undisturbed."* — 100 m (330ft) of relatively undisturbed vegetated areas, rocky areas, or open water >95% of circumference. No structures are within the undisturbed part of buffer**.** (relatively undisturbed also means no-grazing, no landscaping, no daily human use) **Points = 5** — 100 m (330 ft) of relatively undisturbed vegetated areas, rocky areas, or open water > 50% circumference. **Points = 4** — 50 m (170ft) of relatively undisturbed vegetated areas, rocky areas, or open water >95% circumference. **Points = 4** — 100 m (330ft) of relatively undisturbed vegetated areas, rocky areas, or open water > 25% circumference, . **Points = 3** — 50 m (170ft) of relatively undisturbed vegetated areas, rocky areas, or open water for > 50% circumference. **Points = 3** **If buffer does not meet any of the criteria above** — No paved areas (except paved trails) or buildings within 25 m (80ft) of wetland > 95% circumference. Light to moderate grazing, or lawns are OK. **Points = 2** — No paved areas or buildings within 50m of wetland for >50% circumference. Light to moderate grazing, or lawns are OK. **Points = 2** — Heavy grazing in buffer. **Points = 1** — Vegetated buffers are <2m wide (6.6ft) for more than 95% of the circumference (e.g. tilled fields, paving, basalt bedrock extend to edge of wetland **Points = 0**. — Buffer does not meet any of the criteria above. **Points = 1** Aerial photo showing buffers	**Figure** ___ 1
H 2.2 Corridors and Connections ***(see p. 81)*** H 2.2.1 Is the wetland part of a relatively undisturbed and unbroken vegetated corridor (either riparian or upland) that is at least 150 ft wide, has at least 30% cover of shrubs, forest or native undisturbed prairie, that connects to estuaries, other wetlands or undisturbed uplands that are at least 250 acres in size? (*dams in riparian corridors, heavily used gravel roads, paved roads, are considered breaks in the corridor*). YES = **4 points** (*go to H 2.3*) NO = go to H 2.2.2 H 2.2.2 Is the wetland part of a relatively undisturbed and unbroken vegetated corridor (either riparian or upland) that is at least 50ft wide, has at least 30% cover of shrubs or forest, and connects to estuaries, other wetlands or undisturbed uplands that are at least 25 acres in size? **OR** a **Lake-fringe** wetland, if it does not have an undisturbed corridor as in the question above? YES = **2 points** (*go to H 2.3*) NO = H 2.2.3 H 2.2.3 Is the wetland: within 5 mi (8km) of a brackish or salt water estuary OR within 3 mi of a large field or pasture (>40 acres) OR within 1 mi of a lake greater than 20 acres? YES = **1 point** NO = **0 points**	2

Total for page 3

H 2.3 Near or adjacent to other priority habitats listed by WDFW ***(see new and complete descriptions of WDFW priority habitats, and the counties in which they can be found, in the PHS report http://wdfw.wa.gov/hab/phslist.htm)***

Which of the following priority habitats are within 330ft (100m) of the wetland unit? *NOTE: the connections do not have to be relatively undisturbed.*

____**Aspen Stands:** Pure or mixed stands of aspen greater than 0.4 ha (1 acre).

__X__**Biodiversity Areas and Corridors**: Areas of habitat that are relatively important to various species of native fish and wildlife (*full descriptions in WDFW PHS report p. 152*).

____**Herbaceous Balds:** Variable size patches of grass and forbs on shallow soils over bedrock.

____**Old-growth/Mature forests:** (Old-growth west of Cascade crest) Stands of at least 2 tree species, forming a multi-layered canopy with occasional small openings; with at least 20 trees/ha (8 trees/acre) > 81 cm (32 in) dbh or > 200 years of age. **(**Mature forests) Stands with average diameters exceeding 53 cm (21 in) dbh; crown cover may be less that 100%; crown cover may be less that 100%; decay, decadence, numbers of snags, and quantity of large downed material is generally less than that found in old-growth; 80 - 200 years old west of the Cascade crest.

____**Oregon white Oak:** Woodlands Stands of pure oak or oak/conifer associations where canopy coverage of the oak component is important (*full descriptions in WDFW PHS report p. 158*).

__X__**Riparian**: The area adjacent to aquatic systems with flowing water that contains elements of both aquatic and terrestrial ecosystems which mutually influence each other.

____**Westside Prairies:** Herbaceous, non-forested plant communities that can either take the form of a dry prairie or a wet prairie (*full descriptions in WDFW PHS report p. 161*).

__X__**Instream:** The combination of physical, biological, and chemical processes and conditions that interact to provide functional life history requirements for instream fish and wildlife resources.

____ **Nearshore**: Relatively undisturbed nearshore habitats. These include Coastal Nearshore, Open Coast Nearshore, and Puget Sound Nearshore. (*full descriptions of habitats and the definition of relatively undisturbed are in WDFW report: pp. 167-169 and glossary in Appendix A).*

____**Caves:** A naturally occurring cavity, recess, void, or system of interconnected passages under the earth in soils, rock, ice, or other geological formations and is large enough to contain a human.

____**Cliffs:** Greater than 7.6 m (25 ft) high and occurring below 5000 ft.

____**Talus:** Homogenous areas of rock rubble ranging in average size 0.15 - 2.0 m (0.5 - 6.5 ft), composed of basalt, andesite, and/or sedimentary rock, including riprap slides and mine tailings. May be associated with cliffs.

____**Snags and Logs:** Trees are considered snags if they are dead or dying and exhibit sufficient decay characteristics to enable cavity excavation/use by wildlife. Priority snags have a diameter at breast height of > 51 cm (20 in) in western Washington and are > 2 m (6.5 ft) in height. Priority logs are > 30 cm (12 in) in diameter at the largest end, and > 6 m (20 ft) long.

If wetland has **3 or more** priority habitats **= 4 points**

If wetland has **2** priority habitats = **3 points**

If wetland has **1** priority habitat **= 1 point** No habitats = 0 points

Note: All vegetated wetlands are by definition a priority habitat but are not included in this list. Nearby wetlands are addressed in question H 2.4)

4

Wetland name or number A

H 2.4 Wetland Landscape *(choose the **one** description of the landscape around the wetland that best fits*) ***(see p. 84)*** There are at least 3 other wetlands within ½ mile, and the connections between them are relatively undisturbed (light grazing between wetlands OK, as is lake shore with some boating, but connections should NOT be bisected by paved roads, fill, fields, or other development. points = 5 The wetland is Lake-fringe on a lake with little disturbance and there are 3 other lake-fringe wetlands within ½ mile points = 5 There are at least 3 other wetlands within ½ mile, BUT the connections between them are disturbed points = 3 The wetland is Lake-fringe on a lake **with** disturbance and there are 3 other lake-fringe wetland within ½ mile points = 3 There is at least 1 wetland within ½ mile. points = 2 There are no wetlands within ½ mile. points = 0	3
H 2. TOTAL Score - opportunity for providing habitat *Add the scores from H2.1,H2.2, H2.3, H2.4*	10
TOTAL for H 1 from page 14	12
Total Score for Habitat Functions – add the points for H 1, H 2 and record the result on p. 1	22

Wetland name or number A

CATEGORIZATION BASED ON SPECIAL CHARACTERISTICS

Please determine if the wetland meets the attributes described below and circle the appropriate answers and Category.

Wetland Type *Check off any criteria that apply to the wetland. Circle the Category when the appropriate criteria are met.*	**Category**
SC 1.0 Estuarine wetlands ***(see p. 86)*** Does the wetland unit meet the following criteria for Estuarine wetlands? — The dominant water regime is tidal, — Vegetated, and — With a salinity greater than 0.5 ppt. YES = Go to SC 1.1 NO X	
SC 1.1 Is the wetland unit within a National Wildlife Refuge, National Park, National Estuary Reserve, Natural Area Preserve, State Park or Educational, Environmental, or Scientific Reserve designated under WAC 332-30-151? YES = Category I NO go to SC 1.2	**Cat. I**
SC 1.2 Is the wetland unit at least 1 acre in size and meets at least two of the following three conditions? YES = Category I NO = Category II — The wetland is relatively undisturbed (has no diking, ditching, filling, cultivation, grazing, and has less than 10% cover of non-native plant species. If the non-native *Spartina* spp. are the only species that cover more than 10% of the wetland, then the wetland should be given a dual rating (I/II). The area of Spartina would be rated a Category II while the relatively undisturbed upper marsh with native species would be a Category I. Do not, however, exclude the area of Spartina in determining the size threshold of 1 acre. — At least ¾ of the landward edge of the wetland has a 100 ft buffer of shrub, forest, or un-grazed or un-mowed grassland. — The wetland has at least 2 of the following features: tidal channels, depressions with open water, or contiguous freshwater wetlands.	**Cat. I** **Cat. II** **Dual rating I/II**

SC 2.0 Natural Heritage Wetlands ***(see p. 87)*** Natural Heritage wetlands have been identified by the Washington Natural Heritage Program/DNR as either high quality undisturbed wetlands or wetlands that support state Threatened, Endangered, or Sensitive plant species. SC 2.1 Is the wetland unit being rated in a Section/Township/Range that contains a Natural Heritage wetland? *(this question is used to screen out most sites before you need to contact WNHP/DNR)* S/T/R information from Appendix D ___ or accessed from WNHP/DNR web site ___ YES____ – contact WNHP/DNR (see p. 79) and go to SC 2.2 NO X SC 2.2 Has DNR identified the wetland as a high quality undisturbed wetland or as or as a site with state threatened or endangered plant species? YES = Category I NO ____not a Heritage Wetland	**Cat. I**
SC 3.0 Bogs ***(see p. 87)*** Does the wetland unit (**or any part of the unit**) meet both the criteria for soils and vegetation in bogs? *Use the key below to identify if the wetland is a bog.* ***If you answer yes you will still need to rate the wetland based on its functions.*** 1. Does the unit have organic soil horizons (i.e. layers of organic soil), either peats or mucks, that compose 16 inches or more of the first 32 inches of the soil profile? (See Appendix B for a field key to identify organic soils)? Yes - go to Q. 3 X No - go to Q. 2 2. Does the unit have organic soils, either peats or mucks that are less than 16 inches deep over bedrock, or an impermeable hardpan such as clay or volcanic ash, or that are floating on a lake or pond? Yes - go to Q. 3 X No - Is not a bog for purpose of rating 3. Does the unit have more than 70% cover of mosses at ground level, AND other plants, if present, consist of the "bog" species listed in Table 3 as a significant component of the vegetation (more than 30% of the total shrub and herbaceous cover consists of species in Table 3)? Yes – Is a bog for purpose of rating No - go to Q. 4 NOTE: If you are uncertain about the extent of mosses in the understory you may substitute that criterion by measuring the pH of the water that seeps into a hole dug at least 16" deep. If the pH is less than 5.0 and the "bog" plant species in Table 3 are present, the wetland is a bog. *1.* Is the unit forested (> 30% cover) with sitka spruce, subalpine fir, western red cedar, western hemlock, lodgepole pine, quaking aspen, Englemann's spruce, or western white pine, WITH any of the species (or combination of species) on the bog species plant list in Table 3 as a significant component of the ground cover *(> 30% coverage of the total shrub/herbaceous cover)?* 2. YES = Category I No___ Is not a bog for purpose of rating	**Cat. I**

SC 4.0 Forested Wetlands *(see p. 90)* Does the wetland unit have at least 1 acre of forest that meet one of these criteria for the Department of Fish and Wildlife's forests as priority habitats? *If you answer yes you will still need to rate the wetland based on its functions.* — **Old-growth forests**: (west of Cascade crest) Stands of at least two tree species, forming a multi-layered canopy with occasional small openings; with at least 8 trees/acre (20 trees/hectare) that are at least 200 years of age OR have a diameter at breast height (dbh) of 32 inches (81 cm) or more. NOTE: The criterion for dbh is based on measurements for upland forests. Two-hundred year old trees in wetlands will often have a smaller dbh because their growth rates are often slower. The DFW criterion is and "OR" so old-growth forests do not necessarily have to have trees of this diameter. — **Mature forests**: (west of the Cascade Crest) Stands where the largest trees are 80 – 200 years old OR have average diameters (dbh) exceeding 21 inches (53cm); crown cover may be less that 100%; decay, decadence, numbers of snags, and quantity of large downed material is generally less than that found in old-growth. YES = Category I NO X not a forested wetland with special characteristics	**Cat. I**
SC 5.0 Wetlands in Coastal Lagoons *(see p. 91)* Does the wetland meet all of the following criteria of a wetland in a coastal lagoon? — The wetland lies in a depression adjacent to marine waters that is wholly or partially separated from marine waters by sandbanks, gravel banks, shingle, or, less frequently, rocks — The lagoon in which the wetland is located contains surface water that is saline or brackish (> 0.5 ppt) during most of the year in at least a portion of the lagoon *(needs to be measured near the bottom)* YES = Go to SC 5.1 NO X not a wetland in a coastal lagoon SC 5.1 Does the wetland meets all of the following three conditions? — The wetland is relatively undisturbed (has no diking, ditching, filling, cultivation, grazing), and has less than 20% cover of invasive plant species (see list of invasive species on p. 74). — At least ¾ of the landward edge of the wetland has a 100 ft buffer of shrub, forest, or un-grazed or un-mowed grassland. — The wetland is larger than 1/10 acre (4350 square feet) YES = Category I NO = Category II	**Cat. I** **Cat. II**

SC 6.0 Interdunal Wetlands ***(see p. 93)*** Is the wetland unit west of the 1889 line (also called the Western Boundary of Upland Ownership or WBUO)? YES - go to SC 6.1 NO X not an interdunal wetland for rating ***If you answer yes you will still need to rate the wetland based on its functions.*** In practical terms that means the following geographic areas: • Long Beach Peninsula- lands west of SR 103 • Grayland-Westport- lands west of SR 105 • Ocean Shores-Copalis- lands west of SR 115 and SR 109 SC 6.1 Is the wetland one acre or larger, or is it in a mosaic of wetlands that is once acre or larger? YES = Category II NO – go to SC 6.2 SC 6.2 Is the unit between 0.1 and 1 acre, or is it in a mosaic of wetlands that is between 0.1 and 1 acre? YES = Category III	**Cat. II** **Cat. III**
Category of wetland based on Special Characteristics *Choose the "highest" rating if wetland falls into several categories, and record on p. 1.* If you answered NO for all types enter "Not Applicable" on p.1	NA

Wetland name or number B

WETLAND RATING FORM – WESTERN WASHINGTON
Version 2 - Updated July 2006 to increase accuracy and reproducibility among users
Updated Oct 2008 with the new WDFW definitions for priority habitats

Name of wetland (if known): Wetland B Date of site visit: 2/13/2012

Rated by C. Douglas & A. Spooner Trained by Ecology? Yes X No___ Date of training May 2007

SEC: 26 TWNSHP: 37N RNGE: 2E Is S/T/R in Appendix D? Yes___ No X

Map of wetland unit: Figure ____ Estimated size _____

SUMMARY OF RATING

Category based on FUNCTIONS provided by wetland

I___ II___ III X IV___

Category I = Score >=70
Category II = Score 51-69
Category III = Score 30-50
Category IV = Score < 30

Score for Water Quality Functions	22
Score for Hydrologic Functions	14
Score for Habitat Functions	21
TOTAL score for Functions	57

Category based on SPECIAL CHARACTERISTICS of wetland

I___ II___ Does not Apply X

Final Category (choose the "highest" category from above)

II

Summary of basic information about the wetland unit

Wetland Unit has Special Characteristics		Wetland HGM Class used for Rating	
Estuarine		**Depressional**	X
Natural Heritage Wetland		**Riverine**	
Bog		**Lake-fringe**	
Mature Forest		**Slope**	
Old Growth Forest		**Flats**	
Coastal Lagoon		**Freshwater Tidal**	
Interdunal			
None of the above	X	Check if unit has multiple HGM classes present	

Wetland name or number B_____

Does the wetland unit being rated meet any of the criteria below?

If you answer YES to any of the questions below you will need to protect the wetland according to the regulations regarding the special characteristics found in the wetland.

Check List for Wetlands That May Need Additional Protection (in addition to the protection recommended for its category)	YES	NO
SP1. *Has the wetland unit been documented as a habitat for any Federally listed Threatened or Endangered **animal or plant** species (T/E species)?* For the purposes of this rating system, "documented" means the wetland is on the appropriate state or federal database.		X
SP2. *Has the wetland unit been documented as habitat for any State listed Threatened or Endangered **animal** species?* For the purposes of this rating system, "documented" means the wetland is on the appropriate state database. Note: Wetlands with State listed plant species are categorized as Category I Natural Heritage Wetlands (see p. 19 of data form).		X
SP3. *Does the wetland unit contain individuals of Priority species listed by the WDFW for the state?*		X
SP4. *Does the wetland unit have a local significance in addition to its functions*? For example, the wetland has been identified in the Shoreline Master Program, the Critical Areas Ordinance, or in a local management plan as having special significance.		X

To complete the next part of the data sheet you will need to determine the Hydrogeomorphic Class of the wetland being rated.

The hydrogeomorphic classification groups wetlands into those that function in similar ways. This simplifies the questions needed to answer how well the wetland functions. The Hydrogeomorphic Class of a wetland can be determined using the key below. See p. 24 for more detailed instructions on classifying wetlands.

Wetland name or number B

Classification of Wetland Units in Western Washington

If the hydrologic criteria listed in each question do not apply to the entire unit being rated, you probably have a unit with multiple HGM classes. In this case, identify which hydrologic criteria in questions 1-7 apply, and go to Question 8.

1. Are the water levels in the entire unit usually controlled by tides (i.e. except during floods)?

NO – go to 2 **YES** – the wetland class is **Tidal Fringe**

If yes, is the salinity of the water during periods of annual low flow below 0.5 ppt (parts per thousand)? **YES – Freshwater Tidal Fringe NO – Saltwater Tidal Fringe (Estuarine)**

*If your wetland can be classified as a Freshwater Tidal Fringe use the forms for **Riverine** wetlands. If it is Saltwater Tidal Fringe it is rated as an **Estuarine** wetland.* Wetlands that were called estuarine in the first and second editions of the rating system are called Salt Water Tidal Fringe in the Hydrogeomorphic Classification. Estuarine wetlands were categorized separately in the earlier editions, and this separation is being kept in this revision. To maintain consistency between editions, the term "Estuarine" wetland is kept. Please note, however, that the characteristics that define Category I and II estuarine wetlands have changed (see p.).

2. The entire wetland unit is flat and precipitation is the only source (>90%) of water to it. Groundwater and surface water runoff are NOT sources of water to the unit.

NO – go to 3 **YES** – The wetland class is **Flats**

If your wetland can be classified as a "Flats" wetland, use the form for **Depressional** wetlands.

3. Does the entire wetland unit **meet both** of the following criteria?

___The vegetated part of the wetland is on the shores of a body of permanent open water (without any vegetation on the surface) at least 20 acres (8 ha) in size;

___At least 30% of the open water area is deeper than 6.6 ft (2 m)?

NO – go to 4 **YES –** The wetland class is **Lake-fringe (Lacustrine Fringe)**

4. Does the entire wetland unit **meet all** of the following criteria?

____The wetland is on a slope (*slope can be very gradual*),

____The water flows through the wetland in one direction (unidirectional) and usually comes from seeps. It may flow subsurface, as sheetflow, or in a swale without distinct banks.

____The water leaves the wetland **without being impounded**?

NOTE: *Surface water does not pond in these type of wetlands except occasionally in very small and shallow depressions or behind hummocks (depressions are usually <3ft diameter and less than 1 foot deep).*

NO - go to 5 **YES –** The wetland class is **Slope**

5. Does the entire wetland unit **meet all** of the following criteria?

____ The unit is in a valley, or stream channel, where it gets inundated by overbank flooding from that stream or river

____ The overbank flooding occurs at least once every two years.

NOTE: The riverine unit can contain depressions that are filled with water when the river is not flooding.

NO - go to 6 **YES** – The wetland class is **Riverine**

6. Is the entire wetland unit in a topographic depression in which water ponds, or is saturated to the surface, at some time during the year. *This means that any outlet, if present, is higher than the interior of the wetland.*

NO – go to 7 **YES –** The wetland class is **Depressional**

7. Is the entire wetland unit located in a very flat area with no obvious depression and no overbank flooding. The unit does not pond surface water more than a few inches. The unit seems to be maintained by high groundwater in the area. The wetland may be ditched, but has no obvious natural outlet.

NO – go to 8 **YES** – The wetland class is **Depressional**

8. Your wetland unit seems to be difficult to classify and probably contains several different HGM clases. For example, seeps at the base of a slope may grade into a riverine floodplain, or a small stream within a depressional wetland has a zone of flooding along its sides. GO BACK AND IDENTIFY WHICH OF THE HYDROLOGIC REGIMES DESCRIBED IN QUESTIONS 1-7 APPLY TO DIFFERENT AREAS IN THE UNIT (make a rough sketch to help you decide). Use the following table to identify the appropriate class to use for the rating system if you have several HGM classes present within your wetland. NOTE: Use this table only if the class that is recommended in the second column represents 10% or more of the total area of the wetland unit being rated. If the area of the class listed in column 2 is less than 10% of the unit; classify the wetland using the class that represents more than 90% of the total area.

HGM Classes within the wetland unit being rated	*HGM Class to Use in Rating*
Slope + Riverine	Riverine
Slope + Depressional	Depressional
Slope + Lake-fringe	Lake-fringe
Depressional + Riverine along stream within boundary	Depressional
Depressional + Lake-fringe	Depressional
Salt Water Tidal Fringe and any other class of freshwater wetland	Treat as ESTUARINE under wetlands with special characteristics

If you are unable still to determine which of the above criteria apply to your wetland, or if you have more than 2 HGM classes within a wetland boundary, classify the wetland as **Depressional** for the rating.

Wetland name or number B

D	**Depressional and Flats Wetlands** **WATER QUALITY FUNCTIONS** - Indicators that the wetland unit functions to improve water quality	**Points** (only 1 score per box)
D	**D 1. Does the wetland unit have the potential to improve water quality?**	***(see p.38)***
D	D 1.1 Characteristics of surface water flows out of the wetland: Unit is a depression with no surface water leaving it (no outlet) points = 3 Unit has an intermittently flowing, OR highly constricted permanently flowing outlet points = 2 Unit has an unconstricted, or slightly constricted, surface outlet (*permanently flowing*) points = 1 Unit is a "flat" depression (Q. 7 on key), or in the Flats class, with permanent surface outflow **and no obvious natural outlet** and/or outlet is a man-made ditch points = 1 (*If ditch is not permanently flowing treat unit as "intermittently flowing"*) Provide photo or drawing	**Figure** ___ 2
D	S 1.2 The soil 2 inches below the surface (or duff layer) is clay or organic *(use NRCS definitions)* YES points = 4 NO points = 0	4
D	D 1.3 Characteristics of persistent vegetation (emergent, shrub, and/or forest Cowardin class) Wetland has persistent, ungrazed, vegetation > = 95% of area points = 5 Wetland has persistent, ungrazed, vegetation > = 1/2 of area points = 3 Wetland has persistent, ungrazed vegetation > = 1/10 of area points = 1 Wetland has persistent, ungrazed vegetation <1/10 of area points = 0 Map of Cowardin vegetation classes	**Figure** ___ 1
D	D1.4 Characteristics of seasonal ponding or inundation. *This is the area of the wetland unit that is ponded for at least 2 months, but dries out sometime during the year. Do not count the area that is permanently ponded. Estimate area as the average condition 5 out of 10 yrs.* Area seasonally ponded is > ½ total area of wetland points = 4 Area seasonally ponded is > ¼ total area of wetland points = 2 Area seasonally ponded is < ¼ total area of wetland points = 0 Map of Hydroperiods	**Figure** ___ 4
D	**Total for D 1** *Add the points in the boxes above*	11
D	**D 2. Does the wetland unit have the opportunity to improve water quality?** Answer YES if you know or believe there are pollutants in groundwater or surface water coming into the wetland that would otherwise reduce water quality in streams, lakes or groundwater downgradient from the wetland. *Note which of the following conditions provide the sources of pollutants. A unit may have pollutants coming from several sources, but any single source would qualify as opportunity.* — Grazing in the wetland or within 150 ft X Untreated stormwater discharges to wetland — Tilled fields or orchards within 150 ft of wetland X A stream or culvert discharges into wetland that drains developed areas, residential areas, farmed fields, roads, or clear-cut logging — Residential, urban areas, golf courses are within 150 ft of wetland — Wetland is fed by groundwater high in phosphorus or nitrogen — Other_____ **YES** multiplier is **2** **NO** multiplier is **1**	***(see p. 44)*** multiplier 2
D	**TOTAL - Water Quality Functions** Multiply the score from D1 by D2 ***Add score to table on p. 1***	22

Wetland name or number B

	D Depressional and Flats Wetlands HYDROLOGIC FUNCTIONS - Indicators that the wetland unit functions to reduce flooding and stream degradation	**Points** (only 1 score per box)
	D 3. Does the wetland unit have the potential to reduce flooding and erosion?	***(see p.46)***
D	D 3.1 Characteristics of surface water flows out of the wetland unit Unit is a depression with no surface water leaving it (no outlet) points = 4 Unit has an intermittently flowing, OR highly constricted permanently flowing outlet points = 2 Unit is a "flat" depression (Q. 7 on key), or in the Flats class, with permanent surface outflow **and no obvious natural outlet** and/or outlet is a man-made ditch points = 1 (*If ditch is not permanently flowing treat unit as "intermittently flowing"*) Unit has an unconstricted, or slightly constricted, surface outlet (*permanently flowing*) points = 0	2
D	D 3.2 Depth of storage during wet periods *Estimate the height of ponding above the bottom of the outlet. For units with no outlet measure from the surface of permanent water or deepest part (if dry).* Marks of ponding are 3 ft or more above the surface or bottom of outlet points = 7 The wetland is a "headwater" wetland" points = 5 Marks of ponding between 2 ft to < 3 ft from surface or bottom of outlet points = 5 Marks are at least 0.5 ft to < 2 ft from surface or bottom of outlet points = 3 Unit is flat (yes to Q. 2 or Q. 7 on key) but has small depressions on the surface that trap water points = 1 Marks of ponding less than 0.5 ft points = 0	5
D	D 3.3 Contribution of wetland unit to storage in the watershed *Estimate the ratio of the area of upstream basin contributing surface water to the wetland to the area of the wetland unit itself.* The area of the basin is less than 10 times the area of unit points = 5 The area of the basin is 10 to 100 times the area of the unit points = 3 The area of the basin is more than 100 times the area of the unit points = 0 Entire unit is in the FLATS class points = 5	0
D	**Total for D 3** *Add the points in the boxes above*	7
D	**D 4. Does the wetland unit have the opportunity to reduce flooding and erosion?** Answer YES if the unit is in a location in the watershed where the flood storage, or reduction in water velocity, it provides helps protect downstream property and aquatic resources from flooding or excessive and/or erosive flows. Answer NO if the water coming into the wetland is controlled by a structure such as flood gate, tide gate, flap valve, reservoir etc. OR you estimate that more than 90% of the water in the wetland is from groundwater in areas where damaging groundwater flooding does not occur. *Note which of the following indicators of opportunity apply.* — Wetland is in a headwater of a river or stream that has flooding problems X Wetland drains to a river or stream that has flooding problems — Wetland has no outlet and impounds surface runoff water that might otherwise flow into a river or stream that has flooding problems — Other_____ **YES** multiplier is **2** **NO** multiplier is **1**	***(see p. 49)*** multiplier 2
D	**TOTAL - Hydrologic Functions** Multiply the score from D 3 by D 4 ***Add score to table on p. 1***	14

Wetland name or number B

These questions apply to wetlands of all HGM classes. HABITAT FUNCTIONS - Indicators that unit functions to provide important habitat	**Points** (only 1 score per box)
H 1. Does the wetland unit have the <u>potential</u> to provide habitat for many species?	
H 1.1 <u>Vegetation structure</u> ***(see p. 72)***	**Figure** ___
Check the types of vegetation classes present (as defined by Cowardin)- Size threshold for each class is ¼ acre or more than 10% of the area if unit is smaller than 2.5 acres. ____Aquatic bed _X_Emergent plants _X_Scrub/shrub (areas where shrubs have >30% cover) _X_Forested (areas where trees have >30% cover) *If the unit has a forested class check if:* ____The forested class has 3 out of 5 strata (canopy, sub-canopy, shrubs, herbaceous, moss/ground-cover) that each cover 20% within the forested polygon *Add the number of vegetation structures that qualify. If you have:* 4 structures or more points = 4 3 structures points = 2 2 structures points = 1 1 structure points = 0 Map of Cowardin vegetation classes	2
H 1.2. <u>Hydroperiods</u> ***(see p. 73)***	**Figure** ___
Check the types of water regimes (hydroperiods) present within the wetland. The water regime has to cover more than 10% of the wetland or ¼ acre to count. (see text for descriptions of hydroperiods) ____Permanently flooded or inundated — 4 or more types present points = 3 _X_Seasonally flooded or inundated — 3 types present points = 2 _X_Occasionally flooded or inundated — 2 types present point = 1 _X_Saturated only — 1 type present points = 0 ____ Permanently flowing stream or river in, or adjacent to, the wetland ____ Seasonally flowing stream in, or adjacent to, the wetland ____ ***Lake-fringe wetland* = 2 points** ____***Freshwater tidal wetland* = 2 points** Map of hydroperiods	2
H 1.3. <u>Richness of Plant Species</u> ***(see p. 75)*** Count the number of plant species in the wetland that cover at least 10 ft^2. (*different patches of the same species can be combined to meet the size threshold)* *You do not have to name the species.* *Do not include Eurasian Milfoil, reed canarygrass, purple loosestrife, Canadian Thistle* If you counted: > 19 species points = 2 *List species below if you want to:* 5 - 19 species points = 1 < 5 species points = 0	1

Total for page 5

Wetland name or number B

H 1.4. Interspersion of habitats ***(see p. 76)*** **Figure ___**

Decide from the diagrams below whether interspersion between Cowardin vegetation classes (described in H 1.1), or the classes and unvegetated areas (can include open water or mudflats) is high, medium, low, or none.

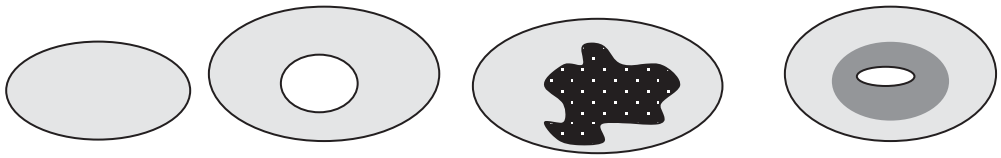

None = 0 points Low = 1 point Moderate = 2 points

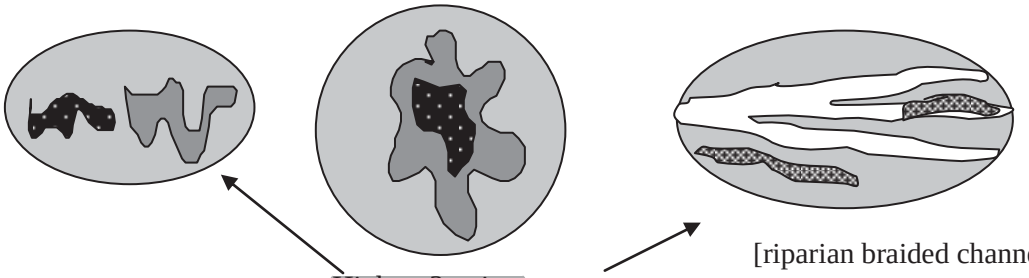

High = 3 points [riparian braided channels]

NOTE: If you have four or more classes or three vegetation classes and open water the rating is always "high". Use map of Cowardin vegetation classes

3

H 1.5. Special Habitat Features: ***(see p. 77)***

Check the habitat features that are present in the wetland. The number of checks is the number of points you put into the next column.

_X_ Large, downed, woody debris within the wetland (>4in. diameter and 6 ft long).

_X_ Standing snags (diameter at the bottom > 4 inches) in the wetland

____ Undercut banks are present for at least 6.6 ft (2m) and/or overhanging vegetation extends at least 3.3 ft (1m) over a stream (or ditch) in, or contiguous with the unit, for at least 33 ft (10m)

____ Stable steep banks of fine material that might be used by beaver or muskrat for denning (>30degree slope) OR signs of recent beaver activity are present *(cut shrubs or trees that have not yet turned grey/brown)*

_X_ At least ¼ acre of thin-stemmed persistent vegetation or woody branches are present in areas that are permanently or seasonally inundated.*(structures for egg-laying by amphibians)*

____ Invasive plants cover less than 25% of the wetland area in each stratum of plants

NOTE: The 20% *stated in early printings of the manual on page 78 is an error.*

3

H 1. TOTAL Score - potential for providing habitat
Add the scores from H1.1, H1.2, H1.3, H1.4, H1.5

11

Comments

Wetland name or number B

H 2. Does the wetland unit have the opportunity to provide habitat for many species?	
H 2.1 Buffers ***(see p. 80)*** *Choose the description that best represents condition of buffer of wetland unit. The highest scoring criterion that applies to the wetland is to be used in the rating. See text for definition of "undisturbed."* — 100 m (330ft) of relatively undisturbed vegetated areas, rocky areas, or open water >95% of circumference. No structures are within the undisturbed part of buffer**.** (relatively undisturbed also means no-grazing, no landscaping, no daily human use) **Points = 5** — 100 m (330 ft) of relatively undisturbed vegetated areas, rocky areas, or open water > 50% circumference. **Points = 4** — 50 m (170ft) of relatively undisturbed vegetated areas, rocky areas, or open water >95% circumference. **Points = 4** — 100 m (330ft) of relatively undisturbed vegetated areas, rocky areas, or open water > 25% circumference, . **Points = 3** — 50 m (170ft) of relatively undisturbed vegetated areas, rocky areas, or open water for > 50% circumference. **Points = 3** **If buffer does not meet any of the criteria above** — No paved areas (except paved trails) or buildings within 25 m (80ft) of wetland > 95% circumference. Light to moderate grazing, or lawns are OK. **Points = 2** — No paved areas or buildings within 50m of wetland for >50% circumference. Light to moderate grazing, or lawns are OK. **Points = 2** — Heavy grazing in buffer. **Points = 1** — Vegetated buffers are <2m wide (6.6ft) for more than 95% of the circumference (e.g. tilled fields, paving, basalt bedrock extend to edge of wetland **Points = 0**. — Buffer does not meet any of the criteria above. **Points = 1** Aerial photo showing buffers	**Figure** ___ 1
H 2.2 Corridors and Connections ***(see p. 81)*** H 2.2.1 Is the wetland part of a relatively undisturbed and unbroken vegetated corridor (either riparian or upland) that is at least 150 ft wide, has at least 30% cover of shrubs, forest or native undisturbed prairie, that connects to estuaries, other wetlands or undisturbed uplands that are at least 250 acres in size? (*dams in riparian corridors, heavily used gravel roads, paved roads, are considered breaks in the corridor*). YES = **4 points** (*go to H 2.3*) NO = go to H 2.2.2 H 2.2.2 Is the wetland part of a relatively undisturbed and unbroken vegetated corridor (either riparian or upland) that is at least 50ft wide, has at least 30% cover of shrubs or forest, and connects to estuaries, other wetlands or undisturbed uplands that are at least 25 acres in size? **OR** a **Lake-fringe** wetland, if it does not have an undisturbed corridor as in the question above? YES = **2 points** (*go to H 2.3*) NO = H 2.2.3 H 2.2.3 Is the wetland: within 5 mi (8km) of a brackish or salt water estuary OR within 3 mi of a large field or pasture (>40 acres) OR within 1 mi of a lake greater than 20 acres? YES = **1 point** NO = **0 points**	2

Total for page 3

H 2.3 Near or adjacent to other priority habitats listed by WDFW ***(see new and complete descriptions of WDFW priority habitats, and the counties in which they can be found, in the PHS report http://wdfw.wa.gov/hab/phslist.htm)***

Which of the following priority habitats are within 330ft (100m) of the wetland unit? *NOTE: the connections do not have to be relatively undisturbed.*

____**Aspen Stands:** Pure or mixed stands of aspen greater than 0.4 ha (1 acre).

_X_**Biodiversity Areas and Corridors**: Areas of habitat that are relatively important to various species of native fish and wildlife (*full descriptions in WDFW PHS report p. 152*).

____**Herbaceous Balds:** Variable size patches of grass and forbs on shallow soils over bedrock.

____**Old-growth/Mature forests:** (Old-growth west of Cascade crest) Stands of at least 2 tree species, forming a multi-layered canopy with occasional small openings; with at least 20 trees/ha (8 trees/acre) > 81 cm (32 in) dbh or > 200 years of age. **(**Mature forests) Stands with average diameters exceeding 53 cm (21 in) dbh; crown cover may be less that 100%; crown cover may be less that 100%; decay, decadence, numbers of snags, and quantity of large downed material is generally less than that found in old-growth; 80 - 200 years old west of the Cascade crest.

____**Oregon white Oak:** Woodlands Stands of pure oak or oak/conifer associations where canopy coverage of the oak component is important (*full descriptions in WDFW PHS report p. 158*).

_X_**Riparian**: The area adjacent to aquatic systems with flowing water that contains elements of both aquatic and terrestrial ecosystems which mutually influence each other.

____**Westside Prairies:** Herbaceous, non-forested plant communities that can either take the form of a dry prairie or a wet prairie (*full descriptions in WDFW PHS report p. 161*).

_X_**Instream:** The combination of physical, biological, and chemical processes and conditions that interact to provide functional life history requirements for instream fish and wildlife resources.

____ **Nearshore**: Relatively undisturbed nearshore habitats. These include Coastal Nearshore, Open Coast Nearshore, and Puget Sound Nearshore. (*full descriptions of habitats and the definition of relatively undisturbed are in WDFW report: pp. 167-169 and glossary in Appendix A).*

____**Caves:** A naturally occurring cavity, recess, void, or system of interconnected passages under the earth in soils, rock, ice, or other geological formations and is large enough to contain a human.

____**Cliffs:** Greater than 7.6 m (25 ft) high and occurring below 5000 ft.

____**Talus:** Homogenous areas of rock rubble ranging in average size 0.15 - 2.0 m (0.5 - 6.5 ft), composed of basalt, andesite, and/or sedimentary rock, including riprap slides and mine tailings. May be associated with cliffs.

____**Snags and Logs:** Trees are considered snags if they are dead or dying and exhibit sufficient decay characteristics to enable cavity excavation/use by wildlife. Priority snags have a diameter at breast height of > 51 cm (20 in) in western Washington and are > 2 m (6.5 ft) in height. Priority logs are > 30 cm (12 in) in diameter at the largest end, and > 6 m (20 ft) long.

If wetland has **3 or more** priority habitats **= 4 points**
If wetland has **2** priority habitats = **3 points**
If wetland has **1** priority habitat **= 1 point** No habitats = 0 points

Note: All vegetated wetlands are by definition a priority habitat but are not included in this list. Nearby wetlands are addressed in question H 2.4)

4

H 2.4 Wetland Landscape *(choose the **one** description of the landscape around the wetland that best fits*) ***(see p. 84)*** There are at least 3 other wetlands within ½ mile, and the connections between them are relatively undisturbed (light grazing between wetlands OK, as is lake shore with some boating, but connections should NOT be bisected by paved roads, fill, fields, or other development. points = 5 The wetland is Lake-fringe on a lake with little disturbance and there are 3 other lake-fringe wetlands within ½ mile points = 5 There are at least 3 other wetlands within ½ mile, BUT the connections between them are disturbed points = 3 The wetland is Lake-fringe on a lake **with** disturbance and there are 3 other lake-fringe wetland within ½ mile points = 3 There is at least 1 wetland within ½ mile. points = 2 There are no wetlands within ½ mile. points = 0	3
H 2. TOTAL Score - opportunity for providing habitat *Add the scores from H2.1,H2.2, H2.3, H2.4*	10
TOTAL for H 1 from page 14	12
Total Score for Habitat Functions – add the points for H 1, H 2 and record the result on p. 1	22

Wetland name or number B

CATEGORIZATION BASED ON SPECIAL CHARACTERISTICS

Please determine if the wetland meets the attributes described below and circle the appropriate answers and Category.

Wetland Type *Check off any criteria that apply to the wetland. Circle the Category when the appropriate criteria are met.*	**Category**
SC 1.0 Estuarine wetlands ***(see p. 86)*** Does the wetland unit meet the following criteria for Estuarine wetlands? — The dominant water regime is tidal, — Vegetated, and — With a salinity greater than 0.5 ppt. YES = Go to SC 1.1 NO X	
SC 1.1 Is the wetland unit within a National Wildlife Refuge, National Park, National Estuary Reserve, Natural Area Preserve, State Park or Educational, Environmental, or Scientific Reserve designated under WAC 332-30-151? YES = Category I NO go to SC 1.2	**Cat. I**
SC 1.2 Is the wetland unit at least 1 acre in size and meets at least two of the following three conditions? YES = Category I NO = Category II — The wetland is relatively undisturbed (has no diking, ditching, filling, cultivation, grazing, and has less than 10% cover of non-native plant species. If the non-native *Spartina* spp. are the only species that cover more than 10% of the wetland, then the wetland should be given a dual rating (I/II). The area of Spartina would be rated a Category II while the relatively undisturbed upper marsh with native species would be a Category I. Do not, however, exclude the area of Spartina in determining the size threshold of 1 acre. — At least ¾ of the landward edge of the wetland has a 100 ft buffer of shrub, forest, or un-grazed or un-mowed grassland. — The wetland has at least 2 of the following features: tidal channels, depressions with open water, or contiguous freshwater wetlands.	**Cat. I** **Cat. II** **Dual rating I/II**

SC 2.0 Natural Heritage Wetlands ***(see p. 87)*** **Cat. I**

Natural Heritage wetlands have been identified by the Washington Natural Heritage Program/DNR as either high quality undisturbed wetlands or wetlands that support state Threatened, Endangered, or Sensitive plant species.

SC 2.1 Is the wetland unit being rated in a Section/Township/Range that contains a Natural Heritage wetland? *(this question is used to screen out most sites before you need to contact WNHP/DNR)*

S/T/R information from Appendix D ___ or accessed from WNHP/DNR web site ___

YES____ – contact WNHP/DNR (see p. 79) and go to SC 2.2 NO X

SC 2.2 Has DNR identified the wetland as a high quality undisturbed wetland or as or as a site with state threatened or endangered plant species?

YES = Category I NO ____not a Heritage Wetland

SC 3.0 Bogs ***(see p. 87)***

Does the wetland unit (**or any part of the unit**) meet both the criteria for soils and vegetation in bogs? *Use the key below to identify if the wetland is a bog.* ***If you answer yes you will still need to rate the wetland based on its functions.***

1. Does the unit have organic soil horizons (i.e. layers of organic soil), either peats or mucks, that compose 16 inches or more of the first 32 inches of the soil profile? (See Appendix B for a field key to identify organic soils)? Yes - go to Q. 3 X No - go to Q. 2
2. Does the unit have organic soils, either peats or mucks that are less than 16 inches deep over bedrock, or an impermeable hardpan such as clay or volcanic ash, or that are floating on a lake or pond?

   Yes - go to Q. 3 X No - Is not a bog for purpose of rating
3. Does the unit have more than 70% cover of mosses at ground level, AND other plants, if present, consist of the "bog" species listed in Table 3 as a significant component of the vegetation (more than 30% of the total shrub and herbaceous cover consists of species in Table 3)?

   Yes – Is a bog for purpose of rating No - go to Q. 4

   NOTE: If you are uncertain about the extent of mosses in the understory you may substitute that criterion by measuring the pH of the water that seeps into a hole dug at least 16" deep. If the pH is less than 5.0 and the "bog" plant species in Table 3 are present, the wetland is a bog.

1. Is the unit forested (> 30% cover) with sitka spruce, subalpine fir, western red cedar, western hemlock, lodgepole pine, quaking aspen, Englemann's spruce, or western white pine, WITH any of the species (or combination of species) on the bog species plant list in Table 3 as a significant component of the ground cover *(> 30% coverage of the total shrub/herbaceous cover)?*

2. YES = Category I No___ Is not a bog for purpose of rating **Cat. I**

SC 4.0 Forested Wetlands *(see p. 90)* Does the wetland unit have at least 1 acre of forest that meet one of these criteria for the Department of Fish and Wildlife's forests as priority habitats? *If you answer yes you will still need to rate the wetland based on its functions.* — **Old-growth forests**: (west of Cascade crest) Stands of at least two tree species, forming a multi-layered canopy with occasional small openings; with at least 8 trees/acre (20 trees/hectare) that are at least 200 years of age OR have a diameter at breast height (dbh) of 32 inches (81 cm) or more. NOTE: The criterion for dbh is based on measurements for upland forests. Two-hundred year old trees in wetlands will often have a smaller dbh because their growth rates are often slower. The DFW criterion is and "OR" so old-growth forests do not necessarily have to have trees of this diameter. — **Mature forests**: (west of the Cascade Crest) Stands where the largest trees are 80 – 200 years old OR have average diameters (dbh) exceeding 21 inches (53cm); crown cover may be less that 100%; decay, decadence, numbers of snags, and quantity of large downed material is generally less than that found in old-growth. YES = Category I NO X not a forested wetland with special characteristics	**Cat. I**
SC 5.0 Wetlands in Coastal Lagoons *(see p. 91)* Does the wetland meet all of the following criteria of a wetland in a coastal lagoon? — The wetland lies in a depression adjacent to marine waters that is wholly or partially separated from marine waters by sandbanks, gravel banks, shingle, or, less frequently, rocks — The lagoon in which the wetland is located contains surface water that is saline or brackish (> 0.5 ppt) during most of the year in at least a portion of the lagoon *(needs to be measured near the bottom)* YES = Go to SC 5.1 NO X not a wetland in a coastal lagoon SC 5.1 Does the wetland meets all of the following three conditions? — The wetland is relatively undisturbed (has no diking, ditching, filling, cultivation, grazing), and has less than 20% cover of invasive plant species (see list of invasive species on p. 74). — At least ¾ of the landward edge of the wetland has a 100 ft buffer of shrub, forest, or un-grazed or un-mowed grassland. — The wetland is larger than 1/10 acre (4350 square feet) YES = Category I NO = Category II	**Cat. I** **Cat. II**

SC 6.0 Interdunal Wetlands ***(see p. 93)*** Is the wetland unit west of the 1889 line (also called the Western Boundary of Upland Ownership or WBUO)? YES - go to SC 6.1 NO X not an interdunal wetland for rating ***If you answer yes you will still need to rate the wetland based on its functions.*** In practical terms that means the following geographic areas: • Long Beach Peninsula- lands west of SR 103 • Grayland-Westport- lands west of SR 105 • Ocean Shores-Copalis- lands west of SR 115 and SR 109 SC 6.1 Is the wetland one acre or larger, or is it in a mosaic of wetlands that is once acre or larger? YES = Category II NO – go to SC 6.2 SC 6.2 Is the unit between 0.1 and 1 acre, or is it in a mosaic of wetlands that is between 0.1 and 1 acre? YES = Category III	**Cat. II** **Cat. III**
Category of wetland based on Special Characteristics *Choose the "highest" rating if wetland falls into several categories, and record on p. 1.* If you answered NO for all types enter "Not Applicable" on p.1	NA

Attachment C

SECTION 12	TOWNSHIP 37N	RANGE 2E	LAT 48°42'57.30" N, LONG 122°29'30.07" W

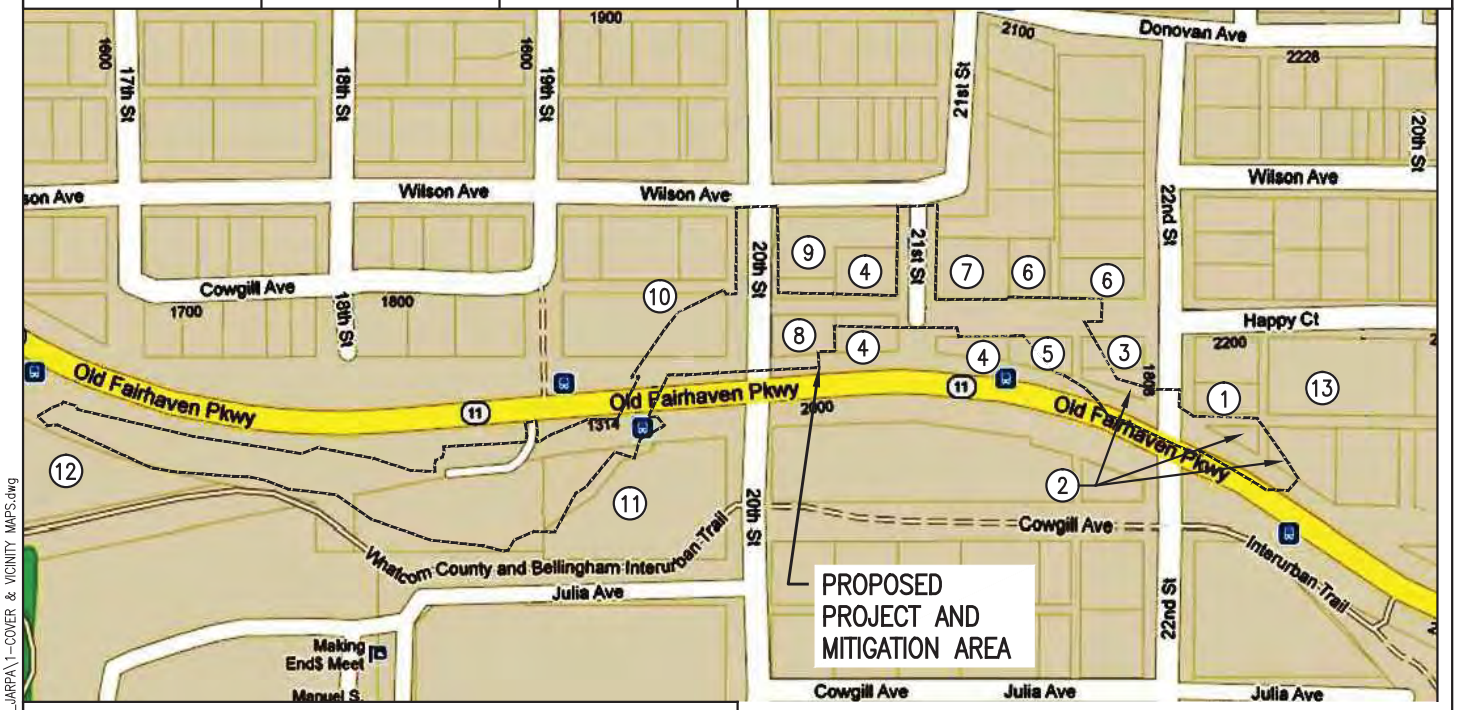

ADJACENT PROPERTY OWNERS

ID #	NAME	MAILING ADDRESS	TAX PARCEL #
1	RICHARD L SULLIVAN	1727 22ND ST, BELLINGHAM, WA 98225	370212521525
2	CITY OF BELLINGHAM	210 LOTTIE STREET BELLINGHAM, WA 98225	370212505526 370212346507 370212326512
3	CAROLYN BLETHEN	1714 22ND STREET, BELLINGHAM, WA 98225	370212503533
4	PEOPLE'S LAND TRUST	PO BOX 4002, BELLINGHAM, WA 981227	370212467546
5	ZACHARIAH S WEST TRUST	1209 15TH STREET, BELLINGHAM WA, 98225	370212492532
6	SCOTT D BRENNAN	1710 22ND STREET, BELLINGHAM, WA 98225	370212506543 370212493545
7	JOSEPH B AND ANNA J DEENY JT	2104 WILSON AVE, BELLINGHAM, WA 98225	370212485548
8	CITY OF BELLINGHAM	210 LOTTIE STREET BELLINGHAM, WA 98225	370212458535
9	JERRY H TEGARDEN	2008 WILSON AVE, BELLINGHAM, WA 98225	370212466549
10	PMC PROPERTIES, LLC	842 WISER LAKE ROAD, LYNDEN, WA 98264	370212416537
11	PADDEN CREEK ASSOCIATES, LLC	1326 FIFTH AVE #711 SEATTLE, WA 98101	370212420507
12	CITY OF BELLINGHAM PARK DEPARTMENT	3424 MERIDIAN ST, BELLINGHAM, WA 98225	370212393510
13	MONTY M SMITH	PO BOX 696, BELLINGHAM, WA 98227	370212538531

VICINITY MAP

SCALE: 1" = 300'

0 300

Scale Feet

LOCATION MAP

REFERENCE:

APPLICANT: CITY OF BELLINGHAM

LOCATION: VICINITY OF OLD FAIRHAVEN PARKWAY BETWEEN 17TH ST AND 22ND ST, BELLINGHAM, WA

LAT 48°42'57.30" N, LONG 122°29'30.07" W

DATUM: NAD 83/98, NAVD 88

WATER BODY: PADDEN CREEK COUNTY: WHATCOM

CITY: BELLINGHAM STATE: WASHINGTON

PROJECT LOCATION MAPS

PROPOSED PROJECT:

PADDEN CREEK DAYLIGHTING PROJECT
WORK INCLUDES NEW DAYLIGHTED CREEK CHANNEL, CULVERT AND PEDESTRIAN BRIDGE, AND WETLAND MITIGATION.

DATE:

Featherstone, John L. - 10/18/2013 1:32:06 PM - \\corp.leidos.com\ESG\PRJ\EC\1798-SEA\001446 BELLINGHAM WA CITY OF\2651111030 Padden Creek Daylighting Project\Data Analytical\CADD\2a_JARPA\1-COVER & VICINITY MAPS.dwg

C CEDAR TREE

P PINE TREE

A ALDER TREE

AP APPLE TREE

F FIR TREE

M MAPLE TREE

COT COTTONWOOD TREE

FIRE HYDRANT

WATER VALVE

SANITARY SEWER MANHOLE

MISCELLANEOUS MANHOLE

TELECOM DEVICE

UTILITY POLE

OHW FLAG

WETLAND FLAG

LUMINAIRE

WETLAND

PROPERTY BOUNDARY

CREEK CENTERLINE

WETLAND BOUNDARY

SANITARY SEWER (PROP.)

SANITARY SEWER (EXIST)

OVERHEAD POWER (EXIST)

ORDINARY HIGH WATER MARK (OHWM)

ROCKERY (EXIST)

EXISTING GROUND (PROFILE)

EXISTING BEDROCK (PROFILE)

WATER LINE (PROP.)

WATER LINE (EXIST.)

STORM DRAIN (PROP.)

STORM DRAIN (EXIST)

CONSTRUCTION LIMITS

CONSTRUCTION GEOTEXTILE FOR SEPARATION

COIR FABRIC

B-1 BORING LOCATION AND DESIGNATION

HA-2 HAND AUGER LOCATION AND DESIGNATION

SURVEY MONUMENT

REMOVAL

LOG WITH ROOTWAD

LOG (PLAN, SECTION)

BOULDER

M TURBIDITY AND pH MONITORING STATION

REBAR PIN

ROOTWAD

STANDING SNAG

STREAMBED SEDIMENT

STREAMBED MIX 1

STREAMBED MIX 2

STREAMBED MIX 3

CONCRETE

CRUSHED SURFACING BASE COURSE OR TOP COURSE

NATIVE MATERIAL/GROUND SURFACE

TOPSOIL

GRAVEL BORROW

QUARRY SPALLS

COIR FABRIC

REFERENCE:

APPLICANT: CITY OF BELLINGHAM

LOCATION: VICINITY OF OLD FAIRHAVEN PARKWAY BETWEEN 17TH ST AND 22ND ST, BELLINGHAM, WA

LEGEND

PROPOSED PROJECT:

PADDEN CREEK DAYLIGHTING PROJECT

DATE:

ABBREVIATIONS

ø	DIAMETER
ACP	ASPHALT CONCRETE PAVEMENT
APPROX	APPROXIMATE
AVE	AVENUE
AVG	AVERAGE
B	BORING
BLVD	BOULEVARD
BOT	BOTTOM
CB	CATCH BASIN
CLR	CLEAR, CLEARANCE
CESCP	CONTRACTOR EROSION SEDIMENT CONTROL PLAN
CHAN	CHANNEL
℄	CENTERLINE
COB	CITY OF BELLINGHAM
CONC	CONCRETE
CSBC	CRUSHED SURFACING BASE COURSE
CSWPPP	CONTAMINATED STORMWATER POLLUTION PREVENTION PLAN
CY, CU YD	CUBIC YARD
DI	DUCTILE IRON
DIA, DIAM	DIAMETER
DWG	DRAWING
DWL	DOWEL
E	EAST, EASTING
EC	EROSION CONTROL
EL, ELEV	ELEVATION
EOP	EDGE OF PAVEMENT
EXIST, EX	EXISTING
FT	FOOT, FEET
GC	GRADE CONTROL LOG
H, HORIZ	HORIZONTAL, HEIGHT
HA	HAND AUGER
IE	INVERT ELEVATION
L	LENGTH
LF	LINEAR FEET
LWD	LARGE WOODY DEBRIS
MAX	MAXIMUM
MH	MANHOLE
MJ	MECHANICAL JOINT
MIN	MINIMUM
MON	MONUMENT
N	NORTH, NORTHING
NAD	NORTH AMERICAN DATUM
NAVD	NORTH AMERICAN VERTICAL DATUM
NE	NORTHEAST
NTS	NOT TO SCALE
NW	NORTHWEST
OC	ON CENTER
OHW	ORDINARY HIGH WATER
OHWM	ORDINARY HIGH WATER MARK
PC	POINT OF CURVATURE
PCD	PLANNING AND COMMUNITY DEVELOPMENT
PKWY	PARKWAY
PRC	POINT OF REVERSE CURVATURE
PVC	POINT OF VERTICAL CURVATURE, POLYVINYL CHLORIDE
PVT	POINT OF VERTICAL TANGENCY
PT	POINT OF TANGENCY
R	RADIUS
ROW	RIGHT OF WAY
S	SOUTH, SLOPE
SD	STORM DRAIN
SDMH	STORM DRAIN MANHOLE
SE	SOUTHEAST
SHT	SHEET
SS	SANITARY SEWER
SSMH	SANITARY SEWER MANHOLE
SST	STAINLESS STEEL
STA	STATION
ST	STREET
SW	SOUTHWEST
TYP	TYPICAL
V, VERT	VERTICAL
VPI	VERTICAL POINT OF INTERSECTION
W	WEST, WATER, WIDTH
W/	WITH
WAC	WASHINGTON ADMINISTRATIVE CODE
WM	WILLIAMETTE MERIDIAN
WSEL	WATER SURFACE ELEVATION
YR	YEAR

KEYED NOTES

1. REMOVE APPROX 210 LF EX CONC SACK WALL.
2. REMOVE BRIDGE AND CULVERT.
3. REMOVE THREE (3) EX 48" DIA CONC CULVERT, APPROX 141 LF EACH AND ADDITIONAL SD PIPE AND STRUCTURE.
4. REMOVE EX SIDEWALK, PAVEMENT, AND MISC UTILITIES ON 20TH ST BETWEEN WILSON AVE AND OLD FAIRHAVEN PARKWAY.
5. REMOVE EX FOOTBRIDGE.
6. REMOVE EX SIDEWALK, PAVEMENT, AND MISC UTILITIES ON 22ND ST NORTH OF OLD FAIRHAVEN PARKWAY.
7. REMOVE EX WING WALLS, HEAD WALL, AND 30 LF EX 60" DIA CONC TUNNEL.
8. CLEARING AND GRUBBING ACTIVITIES SHALL BE LIMITED TO AREAS WITH CONSTRUCTION LIMITS. EXISTING TREES TO BE PRESERVED WHEREVER POSSIBLE.

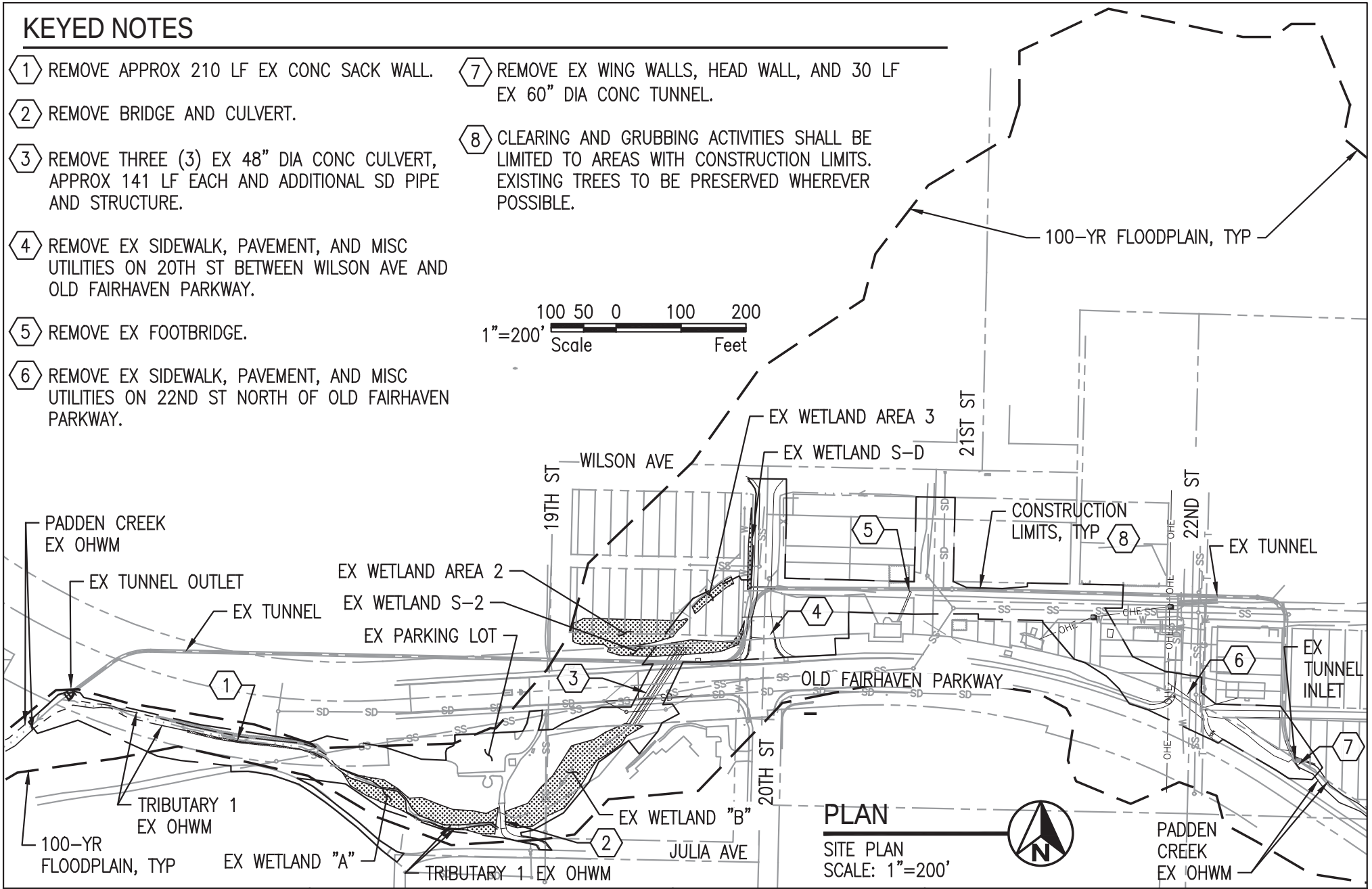

PLAN

SITE PLAN
SCALE: 1"=200'

REFERENCE: APPLICANT: CITY OF BELLINGHAM	LOCATION: VICINITY OF OLD FAIRHAVEN PARKWAY BETWEEN 17TH ST AND 22ND ST, BELLINGHAM, WA	PROPOSED PROJECT: PADDEN CREEK DAYLIGHTING PROJECT	**EXISTING SITE AND REMOVAL PLAN** DATE: SHEET **4** OF 36

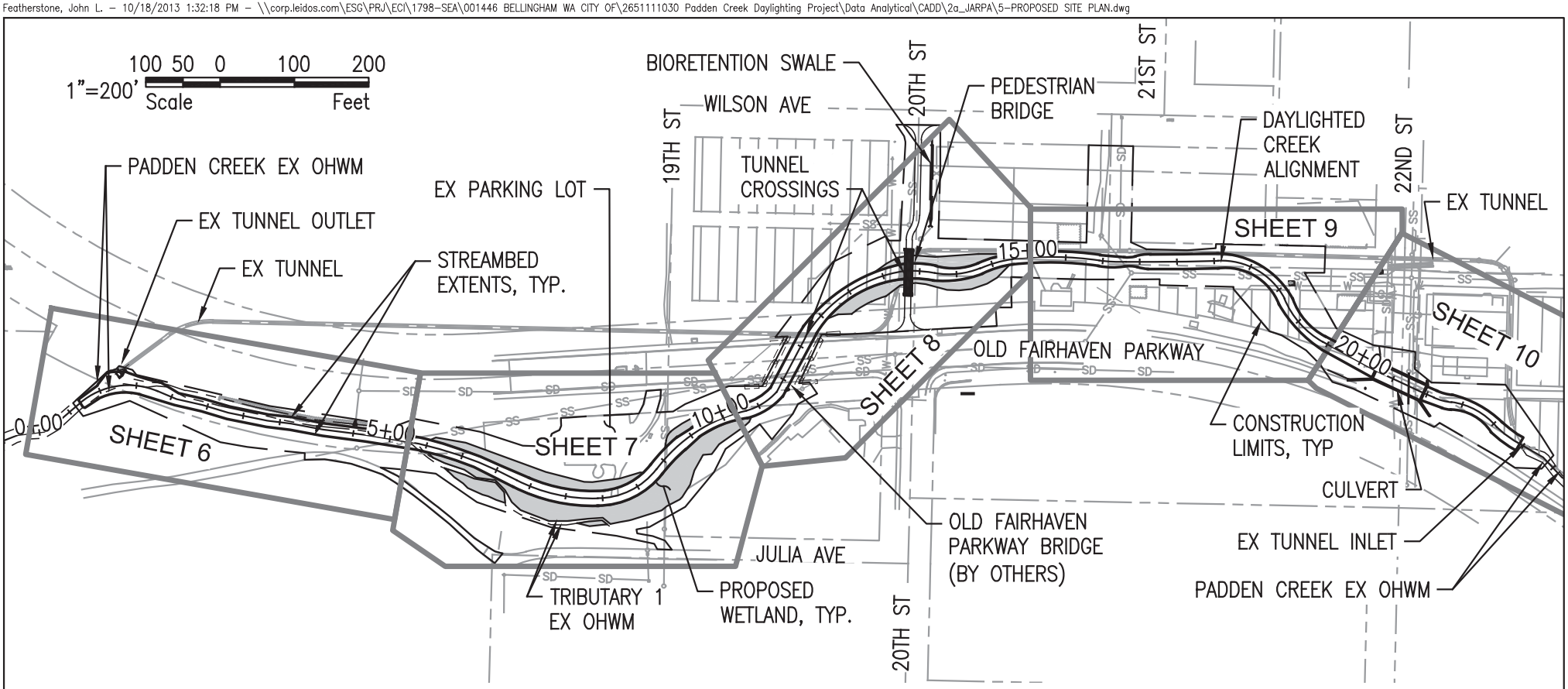

PLAN

SITE PLAN
SCALE: 1"=200'

CUT AND FILL VOLUME TABLE		
DESCRIPTION	CUT (CY)	FILL (CY)
WATERWARD OF OHWM	490 CY	640 CY
OUTSIDE WATERWARD OF OHWM	26,830 CY	6,700 CY
TOTAL	27,320 CY	7,340 CY

REFERENCE: APPLICANT: CITY OF BELLINGHAM	LOCATION: VICINITY OF OLD FAIRHAVEN PARKWAY BETWEEN 17TH ST AND 22ND ST, BELLINGHAM, WA	PROPOSED PROJECT: PADDEN CREEK DAYLIGHTING PROJECT	**PROPOSED SITE PLAN** DATE: SHEET **5** OF 36

Featherstone, John L. – 10/18/2013 1:32:24 PM – \\corp.leidos.com\ESG\PRJ\ECI\1798-SEA\001446 BELLINGHAM WA CITY OF\26511111030 Padden Creek Daylighting Project\Data Analytical\CADD\2a_JARPA\6-CHANNEL PLAN 1 of 5.dwg

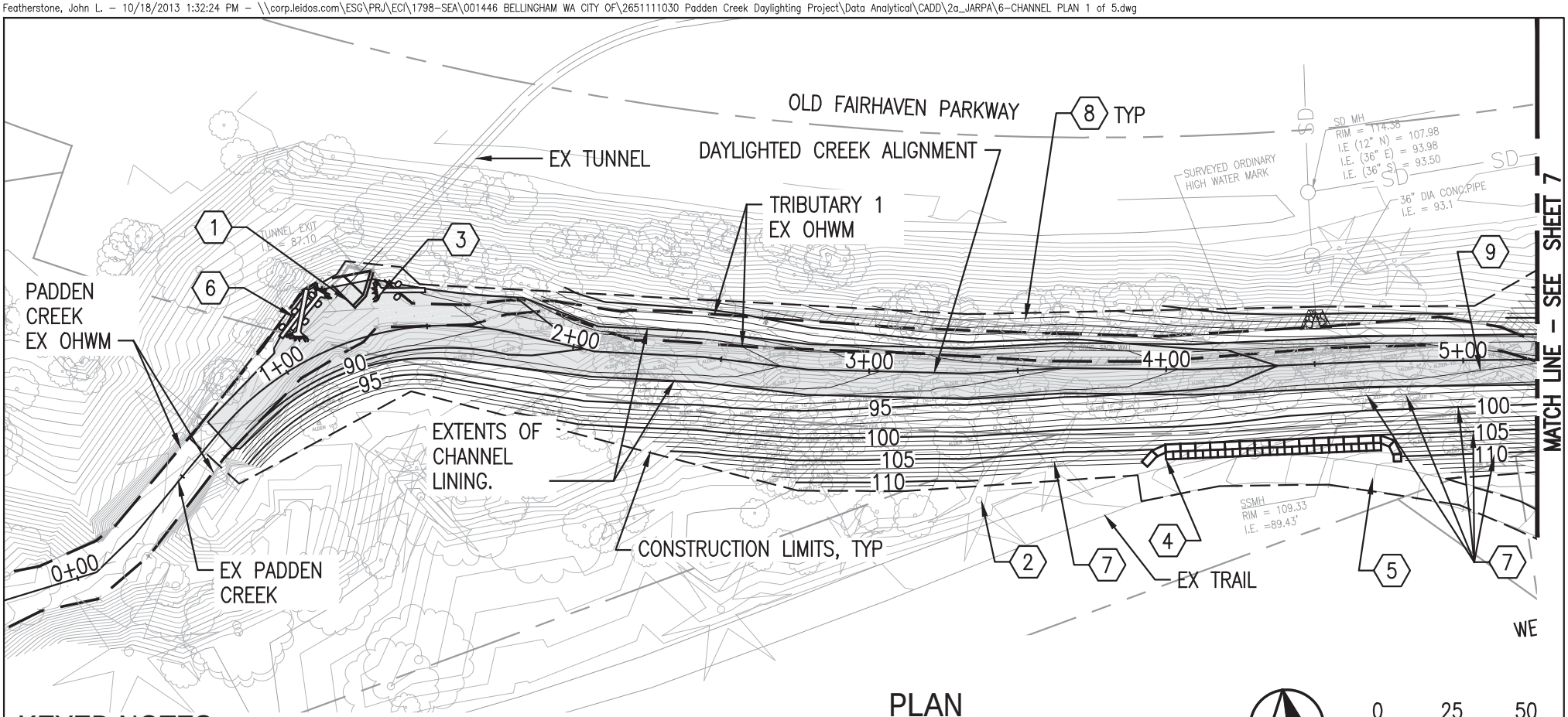

PLAN

SCALE: 1"=50'

0 25 50
Scale Feet

KEYED NOTES

1. TUNNEL OUTLET. SEE SHEET 19.
2. PROTECT EXISTING TREE.
3. TOE LOG. SEE SHEET 15.
4. BLOCK RETAINING WALL.
5. RESTORE TRAIL PER CITY OF
6. BELLINGHAM STD PLAN 02510.01.
7. LOG JAM, SEE SHEET 16. TREE TO BE REUSED ON SITE.
8. PROTECT AND PRESERVE EX ALDER TREES ALONG TOP OF WALL.
9. EX SEWER

REFERENCE: APPLICANT: CITY OF BELLINGHAM	LOCATION: VICINITY OF OLD FAIRHAVEN PARKWAY BETWEEN 17TH ST AND 22ND ST, BELLINGHAM, WA	PROPOSED PROJECT: PADDEN CREEK DAYLIGHTING PROJECT	**CHANNEL PLAN – 1 OF 5** DATE: SHEET **6** OF 36

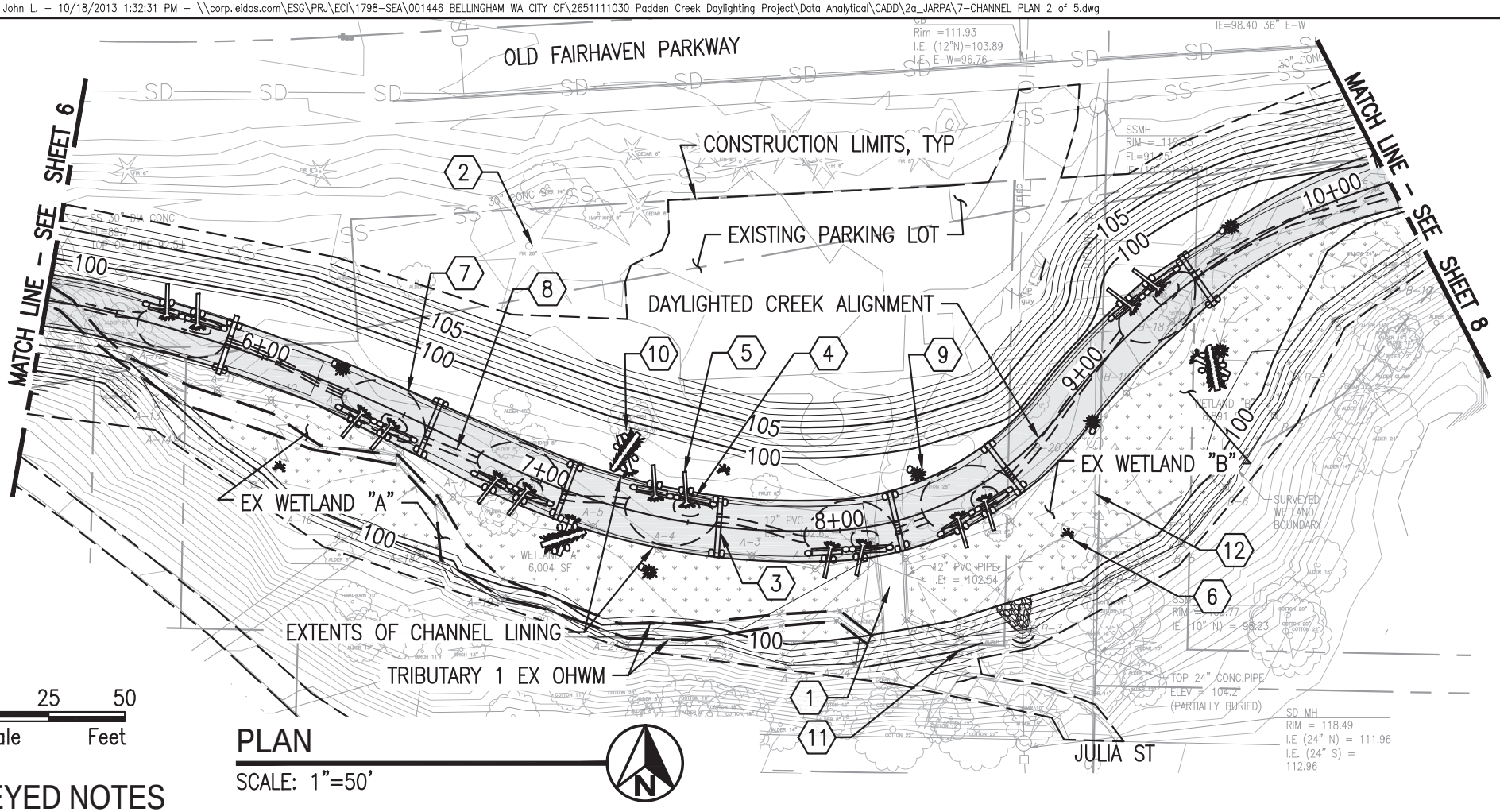

PLAN

SCALE: 1"=50'

KEYED NOTES

1. REMOVE EXISTING BRIDGE, CULVERT, AND PATHWAY FROM PARKING LOT TO EDGE OF SIDEWALK ON JULIA STREET.
2. PROTECT EX TREE
3. BACKWATER LOGS, TYP. SEE SHEET 14.
4. POOL TOE LOGS, TYP. SEE SHEET 14.
5. REVETMENT LOG, TYP. SEE SHEET 14.
6. STANDING SNAG, TYP. SEE SHEET 16.
7. POOL TYPE 1, TYP. SEE SHEET 12.
8. THALWEG, TYP. SEE SHEETS 11 AND 12.
9. ROOTWAD, TYP. SEE SHEET 16.
10. LOG PAIR, SEE SHEET 16.
11. REUSE TREE ON-SITE.
12. EX SS

REFERENCE: APPLICANT: CITY OF BELLINGHAM	LOCATION: VICINITY OF OLD FAIRHAVEN PARKWAY BETWEEN 17TH ST AND 22ND ST, BELLINGHAM, WA	PROPOSED PROJECT: PADDEN CREEK DAYLIGHTING PROJECT	**CHANNEL PLAN – 2 OF 5** DATE: SHEET **7** OF 36

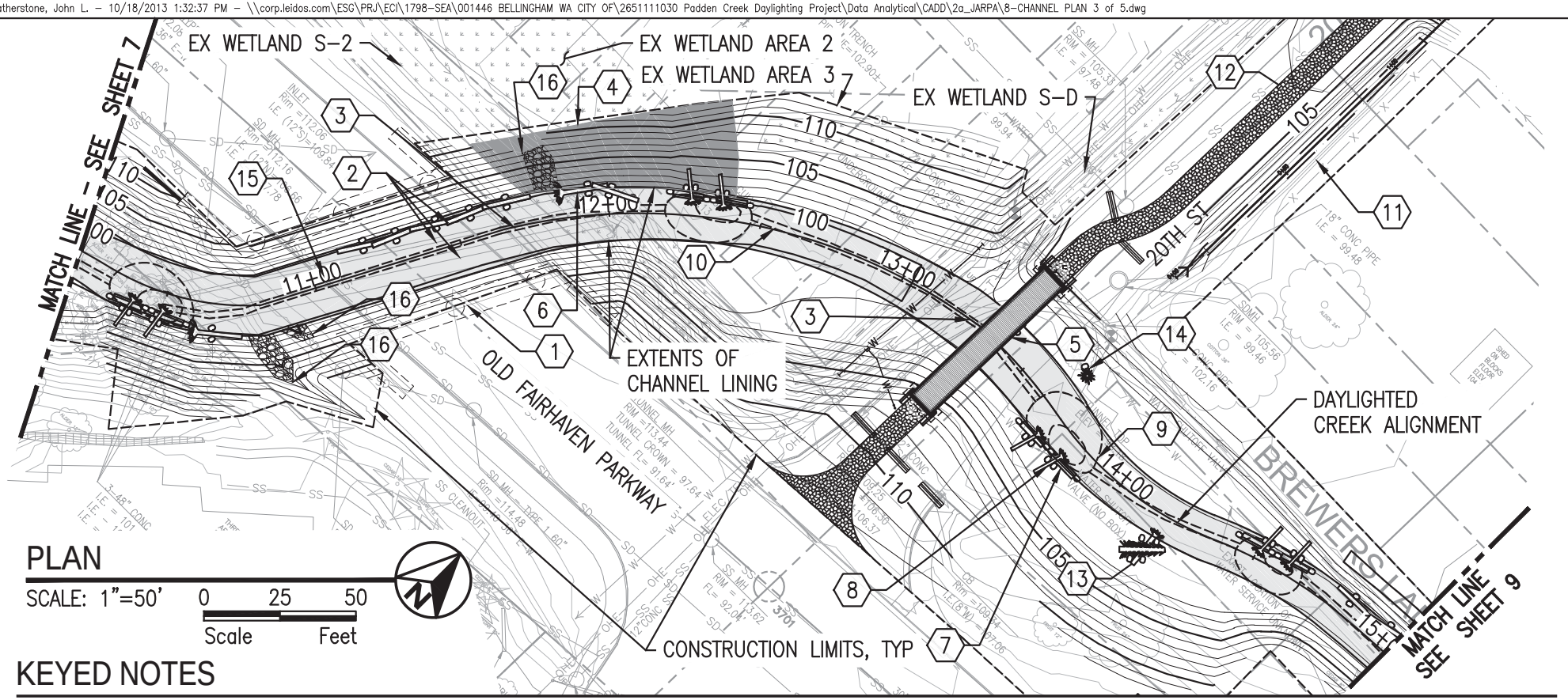

KEYED NOTES

1. CHANNEL CONSTRUCTION UNDER BRIDGE THIS PROJECT. BRIDGE AND RETAINING WALLS BY OTHERS
2. REMOVE THREE (3) EX 48" DIA CONC CULVERTS, APPROX 141 LF EACH.
3. EXISTING TUNNEL CROSSINGS TWO (2) LOCATIONS. PLACE GEO-MEMBRANE OVER TOP OF TUNNEL TO PREVENT POTENTIAL PIPING OF FINES FROM CHANNEL LINING.
4. COMPACTED TILL LINER TO PRESERVE EX WETLAND HYDROLOGY.
5. PEDESTRIAN BRIDGE. SEE SHEET 18.
6. TOE LOG, TYP. SEE SHT 15.
7. POOL TOE LOGS, TYP. SEE SHT 14.
8. REVETMENT LOG, TYP. SEE SHT 14.
9. POOL TYPE 1, TYP. SEE SHT 12.
10. THALWEG, TYP. SEE SHT 11 & 12.
11. BIORETENTION SWALE.
12. TRAIL.
13. LOG PAIR, TYP. SEE SHT 16.
14. ROOTWAD, TYP. SEE SHT 16.
15. REMOVE APPROX 37 LF ABANDONED 36"ø CONC SD.
16. QUARRY SPALL DITCH PROTECTION

REFERENCE: APPLICANT: CITY OF BELLINGHAM	LOCATION: VICINITY OF OLD FAIRHAVEN PARKWAY BETWEEN 17TH ST AND 22ND ST, BELLINGHAM, WA	PROPOSED PROJECT: PADDEN CREEK DAYLIGHTING PROJECT	**CHANNEL PLAN – 3 OF 5** DATE: SHEET **8** OF 36

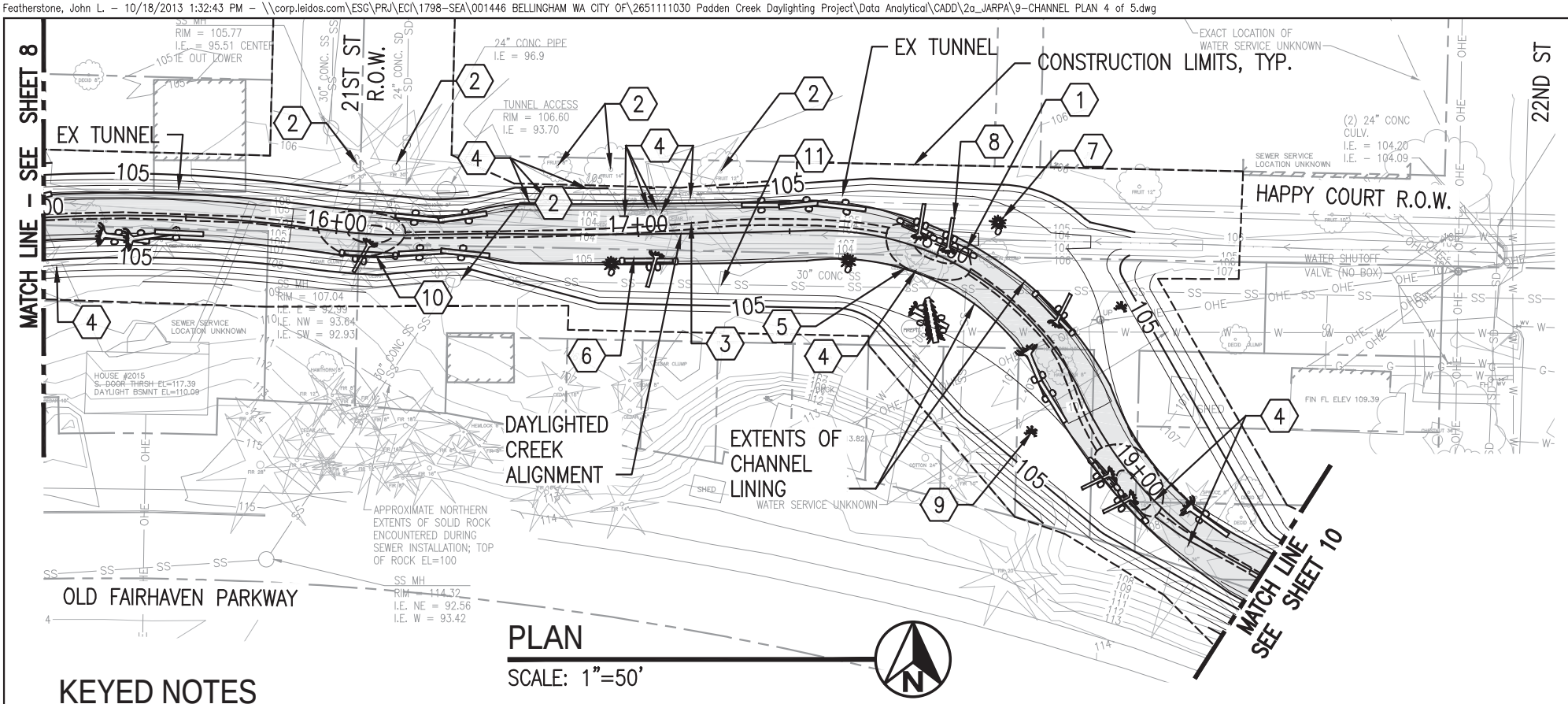

PLAN

SCALE: 1"=50'

KEYED NOTES

1. POOL TOE LOGS, TYP. SEE SHEET 14.
2. PROTECT EXISTING TREES
3. THALWEG, TYP. SEE SHEETS 11 AND 12.
4. REUSE TREE ON-SITE.
5. POOL TYPE 1, SEE SHEET 12.
6. TOE LOG, TYP. SEE SHEET 14.
7. ROOTWAD, TYP. SEE SHEET 16.
8. REVETMENT LOG, TYP. SEE SHEETS 14 (WITH POOL) AND 15 (NO POOL).
9. STANDING SNAG, TYP. SEE SHEET 16.
10. POOL TYPE 2, TYP. SEE SHEET 12.
11. EX SS.

0 25 50
Scale Feet

REFERENCE: APPLICANT: CITY OF BELLINGHAM	LOCATION: VICINITY OF OLD FAIRHAVEN PARKWAY BETWEEN 17TH ST AND 22ND ST, BELLINGHAM, WA	PROPOSED PROJECT: PADDEN CREEK DAYLIGHTING PROJECT	**CHANNEL PLAN – 4 OF 5** DATE: SHEET **9** OF 36

Featherstone, John L. – 10/18/2013 1:32:49 PM – \\corp.leidos.com\ESG\PRJ\ECI\1798-SEA\001446 BELLINGHAM WA CITY OF\26511111030 Padden Creek Daylighting Project\Data Analytical\CADD\2a_JARPA\10-CHANNEL PLAN 5 of 5.dwg

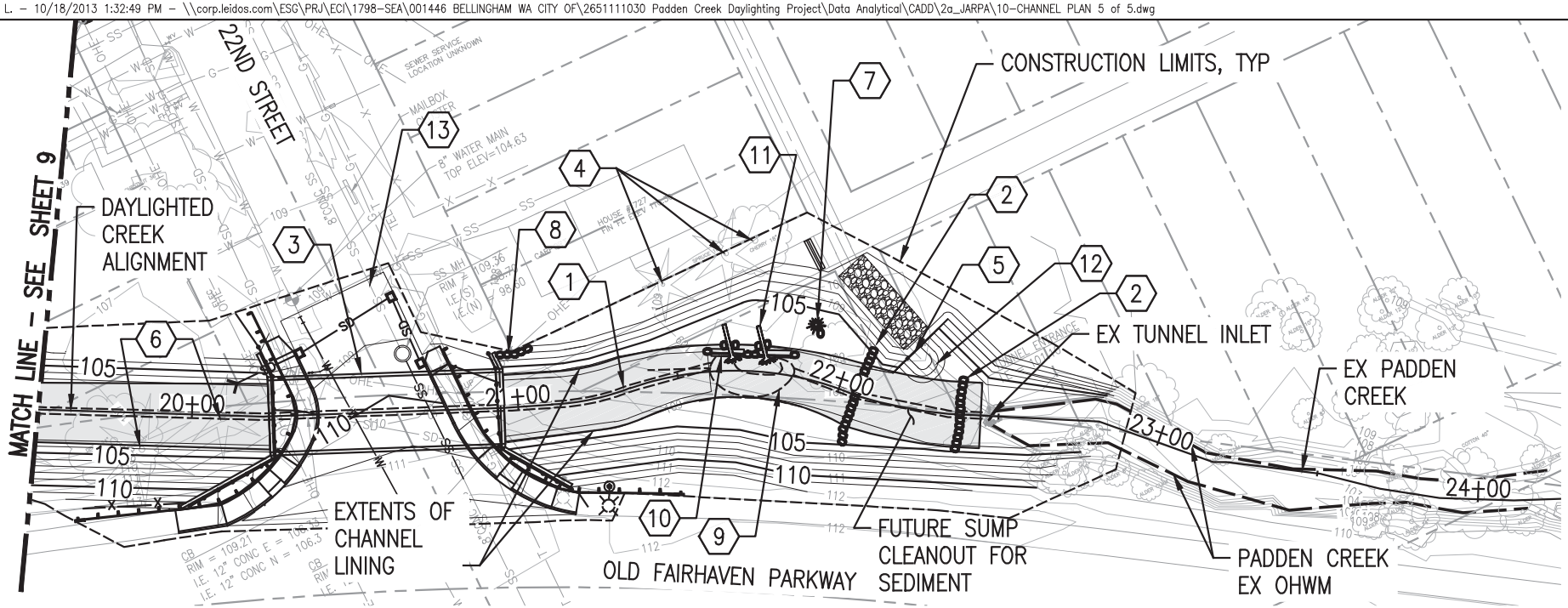

PLAN

SCALE: 1"=50'

KEYED NOTES

1. THALWEG, SEE SHEET 12.
2. ROCK DEFINING LIMITS OF FUTURE SUMP.
3. CONCRETE BOX CULVERT AND WING WALLS. SEE SHEET 17.
4. PROTECT EX TREES.
5. STOP LOG WALL (TO PLUG TUNNEL OPENING). SEE SHEET 19.
6. REUSE TREE ON-SITE.
7. ROOTWAD, TYP. SEE SHEET 16.
8. ROCKERY WALL.
9. POOL TYPE 1. SEE SHEET 12.
10. POOL TOE LOGS, TYP. SEE SHEET 14.
11. REVETMENT LOG, TYP. SEE SHEET 14.
12. EX SS.
13. REMOVE 30' OF EX 60" DIA TUNNEL

0 25 50
Scale Feet

REFERENCE: APPLICANT: CITY OF BELLINGHAM	LOCATION: VICINITY OF OLD FAIRHAVEN PARKWAY BETWEEN 17TH ST AND 22ND ST, BELLINGHAM, WA	PROPOSED PROJECT: PADDEN CREEK DAYLIGHTING PROJECT	**CHANNEL PLAN – 5 OF 5** DATE: SHEET **10** OF 36

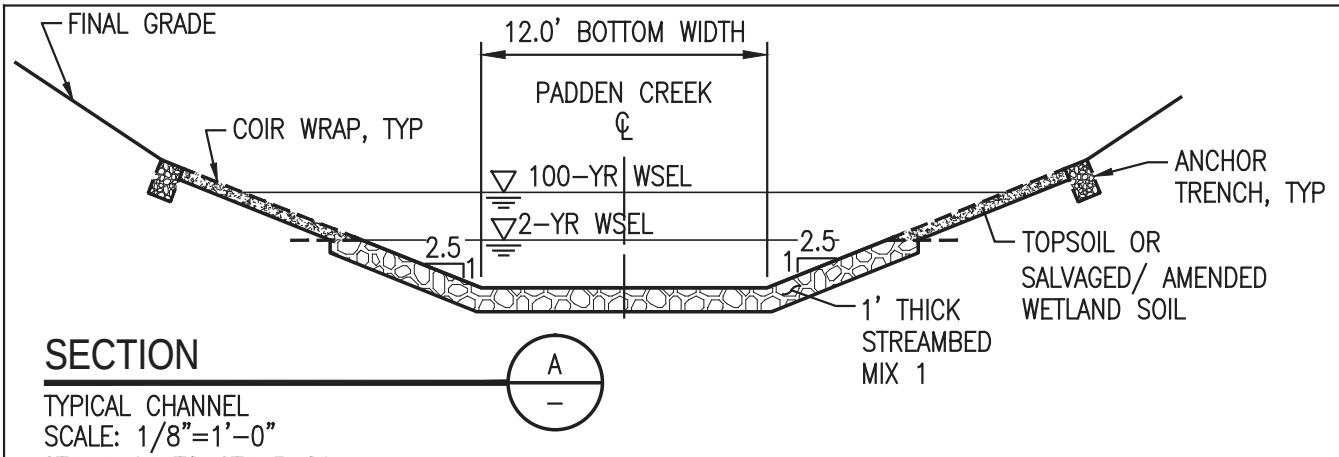

SECTION A –

TYPICAL CHANNEL
SCALE: 1/8"=1'-0"
STA 4+61 TO STA 5+89

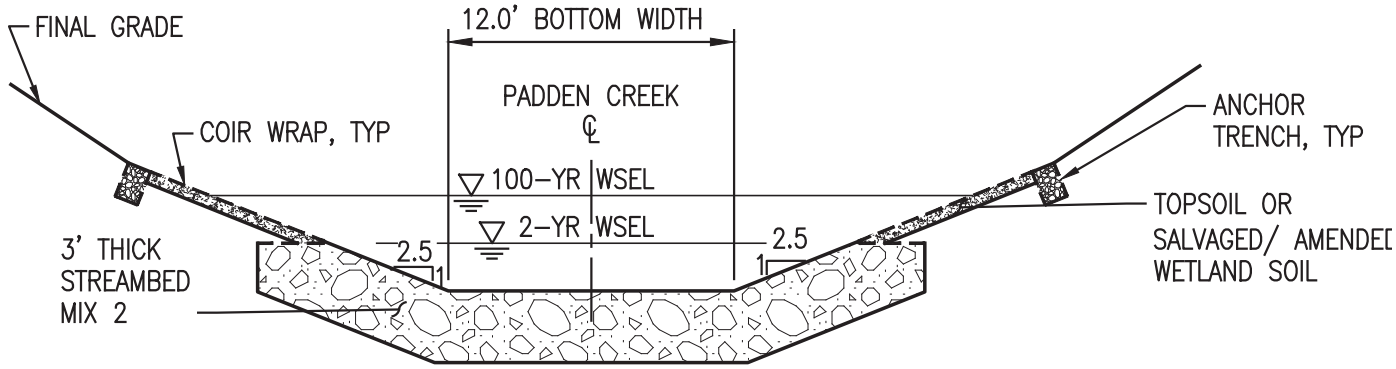

SECTION B –

TYPICAL CHANNEL
SCALE: 1/8"=1'-0"
STA 0+93 TO STA 4+61

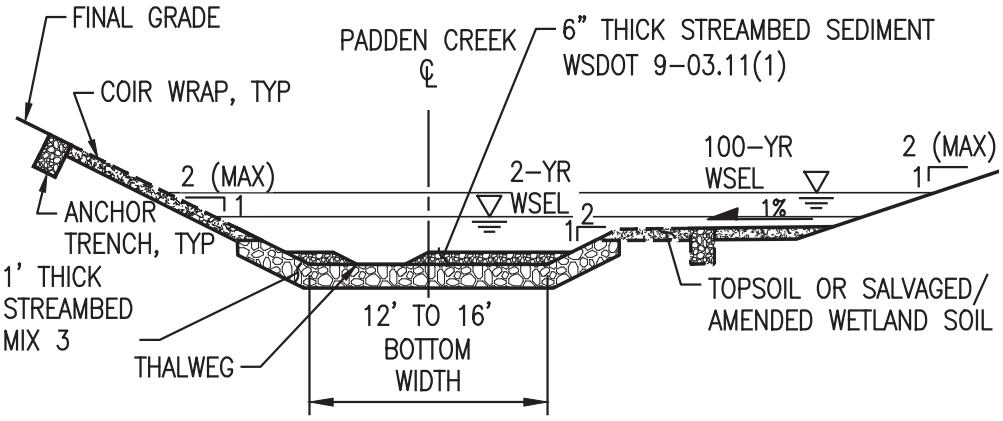

SECTION C –

TYPICAL CHANNEL
SCALE: 1/8"=1'-0"
STA 5+89 TO STA 9+62
STA 11+47 TO STA 11+77
STA 13+05 TO STA 13+35
STA 15+85 TO ST 16+50

GENERAL NOTES

STREAMBED MIX 1:

- 70% 10" COBBLES
- 30% STREAMBED SEDIMENT
- PLUS HABITAT BOULDERS AS SHOWN ON SHEET 13.

STREAMBED MIX 2:

- 60% 12" COBBLES
- 40% STREAMBED SEDIMENT
- PLUS STREAMBED BOULDERS AS SHOWN ON SHEET 13.

STREAMBED MIX 3:

- 70% 6" COBBLES
- 30% STREAMBED SEDIMENT

STREAMBED MIX 4:

- 100% STREAMBED SEDIMENT

1/8"=1'-0" 0 2 4 8 Scale Feet

REFERENCE:

APPLICANT: CITY OF BELLINGHAM

LOCATION: VICINITY OF OLD FAIRHAVEN PARKWAY BETWEEN 17TH ST AND 22ND ST, BELLINGHAM, WA

TYPICAL CHANNEL CROSS SECTIONS – 1 OF 2

PROPOSED PROJECT:
PADDEN CREEK DAYLIGHTING PROJECT

DATE:

Weber, Mary B. – 11/4/2013 8:24:47 AM – P:\EC\1798-SEA\001446 BELLINGHAM WA CITY OF\26511111030 Padden Creek Daylighting Project\Data Analytical\CADD\2a_JARPA\11-TYPICAL CHANNEL CROSS SECTIONS 1 of 2_V2.dwg

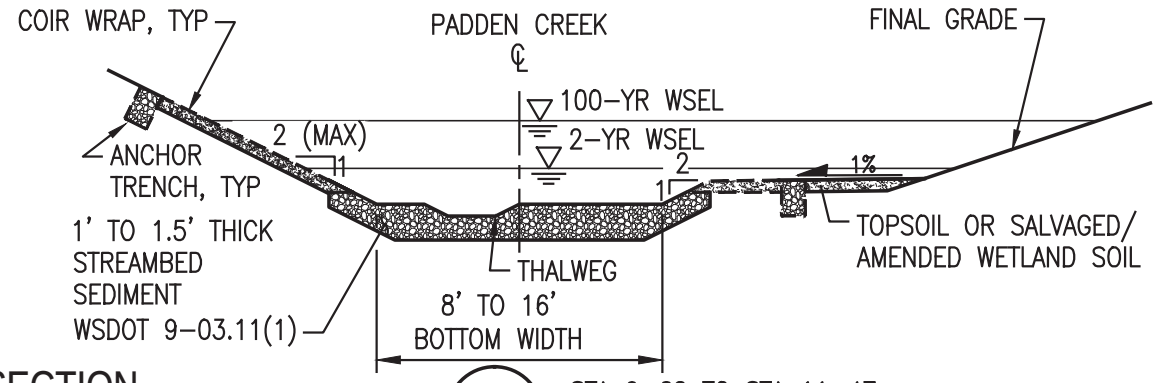

SECTION D

TYPICAL CHANNEL
SCALE: 1/8"=1'-0"

STA 9+62 TO STA 11+47
STA 11+77 TO STA 13+05
STA 13+35 TO STA 15+85
STA 16+50 TO ST 22+45

GENERAL NOTES

1. SEE GENERAL NOTES ON SHEET 11 FOR STREAMBED MIXES
2. SEE SHEET 29 FOR COIR WRAP DETAILS.
3. SEE SHEET 14 FOR LOG PLACEMENT FOR POOL TYPE 1 AND 2.

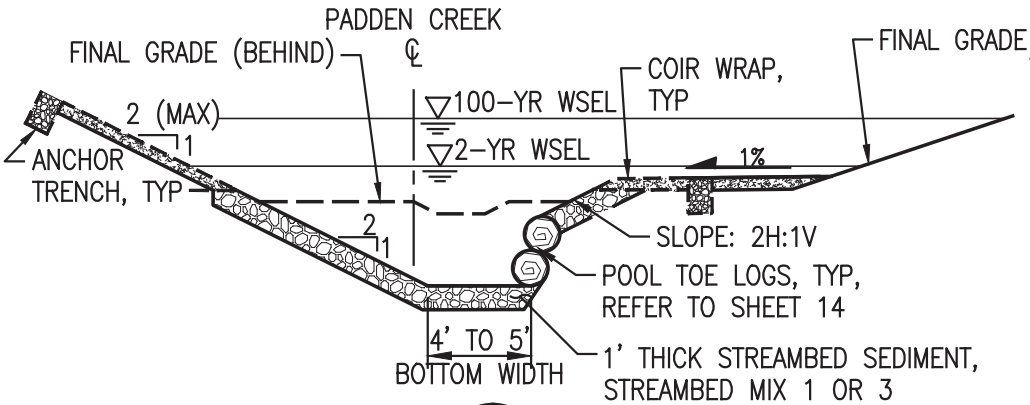

SECTION E

TYPICAL POOL TYPE 1
SCALE: 1/8"=1'-0"

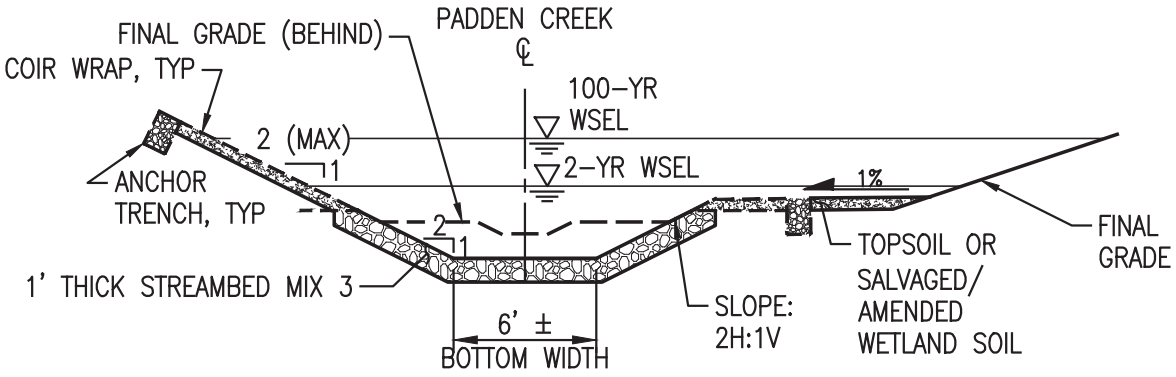

SECTION F

TYPICAL POOL TYPE 2
SCALE: 1/8"=1'-0"
STA 16+12 +/-

1/8"=1'-0" 0 2 4 8 Scale Feet

REFERENCE:

APPLICANT: CITY OF BELLINGHAM

LOCATION: VICINITY OF OLD FAIRHAVEN PARKWAY BETWEEN 17TH ST AND 22ND ST, BELLINGHAM, WA

TYPICAL CHANNEL CROSS SECTIONS – 2 OF 2

PROPOSED PROJECT:
PADDEN CREEK DAYLIGHTING PROJECT

DATE:

SHEET **12** OF 36

Weber, Mary B. - 11/4/2013 8:23:15 AM - P:\EC\1798-SEA\001446 BELLINGHAM WA CITY OF\26511111030 Padden Creek Daylighting Project\Data Analytical\CADD\2a_JARPA\12-TYPICAL CHANNEL CROSS SECTIONS 2 of 2_v2.dwg

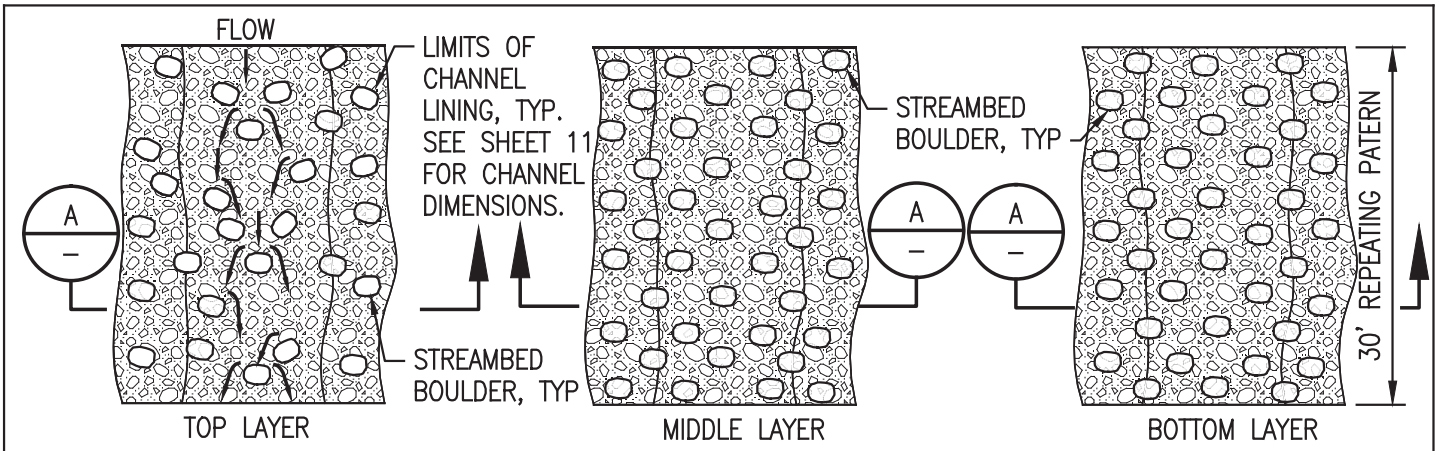

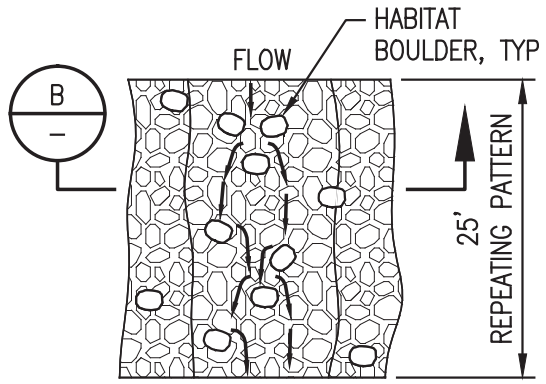

PLAN

STREAMBED MIX 2 REACH
CHANNEL LINING CONSTRUCTION
SCALE: NONE

GENERAL NOTES

1. SEE SHEET 11 FOR MORE SECTION DETAILS

PLAN

STREAMBED MIX 1 REACH
CHANNEL LINING CONSTRUCTION
SCALE: NONE

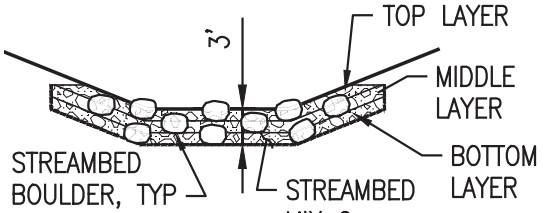

SECTION

A

STREAMBED MIX 2 REACH
CHANNEL LINING CONSTRUCTION
SCALE: NONE

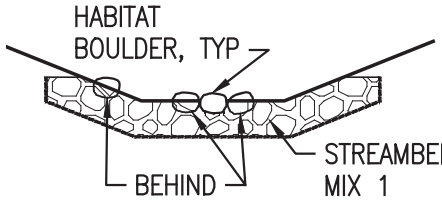

SECTION

B

STREAMBED MIX 1 REACH
CHANNEL LINING CONSTRUCTION
SCALE: NONE

STREAMBED MIX 2 REACH NOTES

1. BOTTOM LAYER STREAMBED BOULDERS SHALL BE PLACED FIRST. LOCATIONS TO BE AS SHOWN AND AS DIRECTED BY THE ENGINEER.
2. PLACE 1 FOOT THICK LAYER OF STREAMBED MIX 2 AROUND STREAMBED BOULDERS. CAREFUL ATTENTION SHALL BE PLACED ON FILLING VOIDS SUCH THAT THERE IS A SEAMLESS LAYER OF ROCK TO THE EXTENT OF THE CHANNEL LINING.
3. STREAMBED BOULDERS SHALL EXTEND 30 TO 50 PERCENT ABOVE THE BOTTOM LAYER OF STREAMBED MIX TO INTERLOCK THE BOTTOM AND MIDDLE LAYERS.
4. PLACE STREAMBED BOULDERS FOR THE MIDDLE LAYER. LOCATIONS TO BE AS SHOWN AND AS DIRECTED BY THE ENGINEER.
5. PLACE 1 FOOT THICK LAYER OF STREAMBED MIX 2 AROUND ROCK. CAREFUL ATTENTION SHALL BE PLACED ON FILLING VOIDS SUCH THAT THERE IS A SEAMLESS LAYER OF ROCK TO THE EXTENT OF THE CHANNEL LINING.
6. STREAMBED BOULDERS SHALL EXTEND 30 TO 50 PERCENT ABOVE THE MIDDLE LAYER OF STREAMBED MIX TO INTERLOCK THE MIDDEL AND TOP LAYERS.
7. PLACE TOP LAYER OF STREAMBED BOULDERS. LOCATIONS TO BE AS SHOWN AND AS DIRECTED BY THE ENGINEER.
8. PLACE 1 FOOT THICK LAYER OF STREAMBED MIX 2 AROUND ROCK. CAREFUL ATTENTION SHALL BE PLACED ON FILLING VOIDS SUCH THAT THERE IS A SEAMLESS LAYER OF ROCK TO THE EXTENT OF THE CHANNEL LINING.
9. STREAMBED BOULDERS IN THE TOP LAYER SHALL BE EXPOSED ABOVE THE STREAMBED MIX BY 30 TO 50 PERCENT TO ADD ROUGHNESS AND VARIATION TO CHANNEL LINING.

REFERENCE:

APPLICANT: CITY OF BELLINGHAM

LOCATION: VICINITY OF OLD FAIRHAVEN PARKWAY BETWEEN 17TH ST AND 22ND ST, BELLINGHAM, WA

STEEP CHANNEL LINING CONSTRUCTION

PROPOSED PROJECT:
PADDEN CREEK DAYLIGHTING PROJECT

DATE:

Featherstone, John L. - 10/18/2013 1:32:57 PM - \\corp.leidos.com\ESG\PRJ\EC\1798-SEA\001446 BELLINGHAM WA CITY OF\2651111030 Padden Creek Daylighting Project\Data Analytical\CADD\2a_JARPA\13-STEEP CHANNEL LINING CONSTRUCTION.dwg

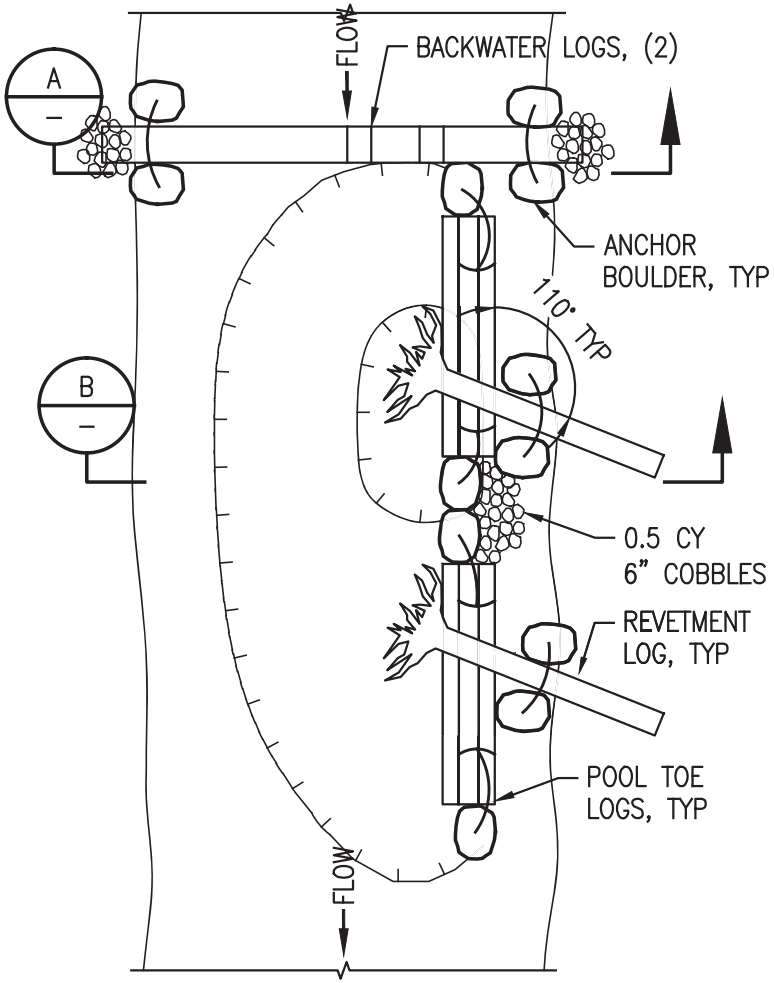

DETAIL 1

BACKWATER, REVETMENT AND POOL TOE LOGS
SCALE: NTS

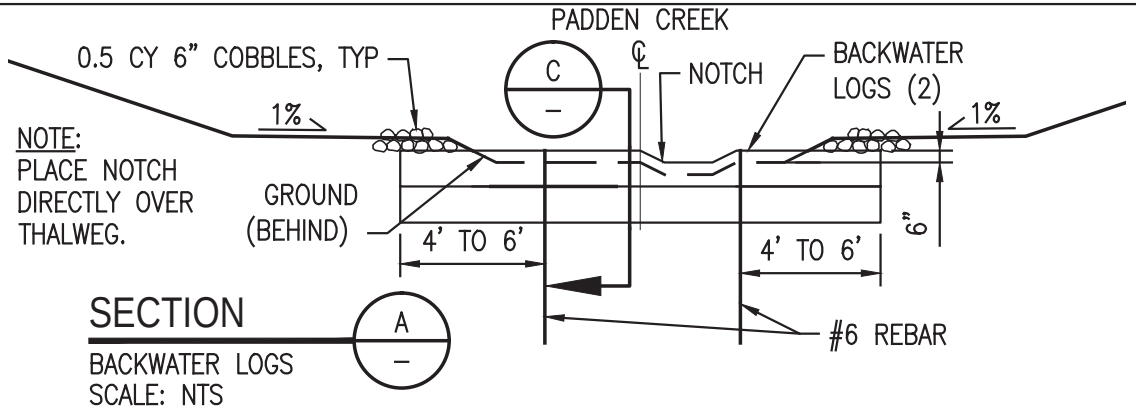

SECTION A

BACKWATER LOGS
SCALE: NTS

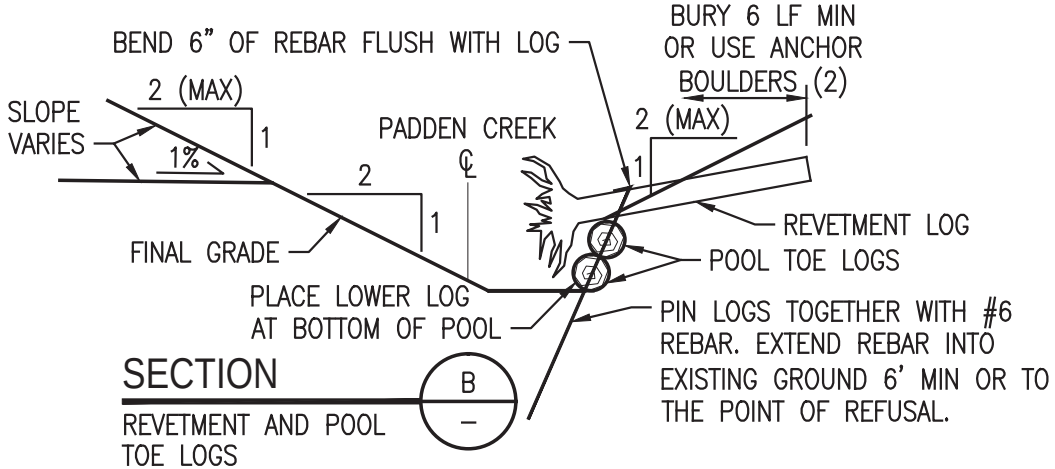

SECTION B

REVETMENT AND POOL TOE LOGS
SCALE: NTS

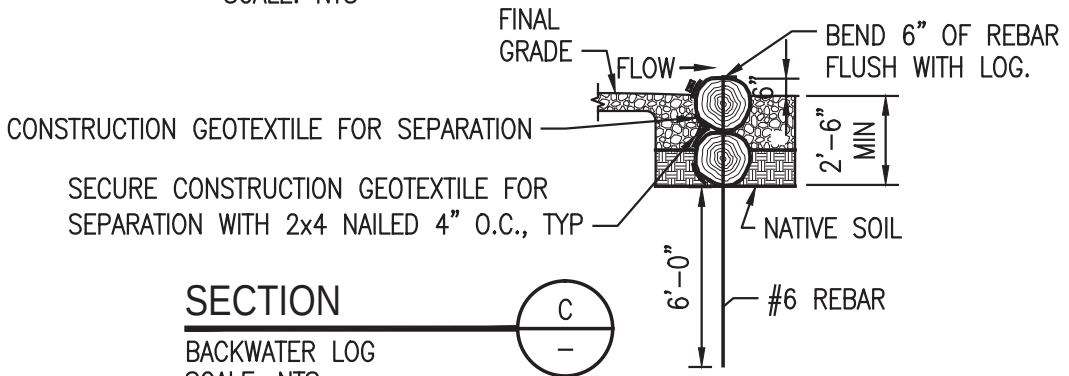

SECTION C

BACKWATER LOG
SCALE: NTS

REFERENCE: APPLICANT: CITY OF BELLINGHAM	LOCATION: VICINITY OF OLD FAIRHAVEN PARKWAY BETWEEN 17TH ST AND 22ND ST, BELLINGHAM, WA	PROPOSED PROJECT: PADDEN CREEK DAYLIGHTING PROJECT	**TYPICAL STREAM HABITAT DETAILS – 1 OF 3** DATE: SHEET **14** OF 36

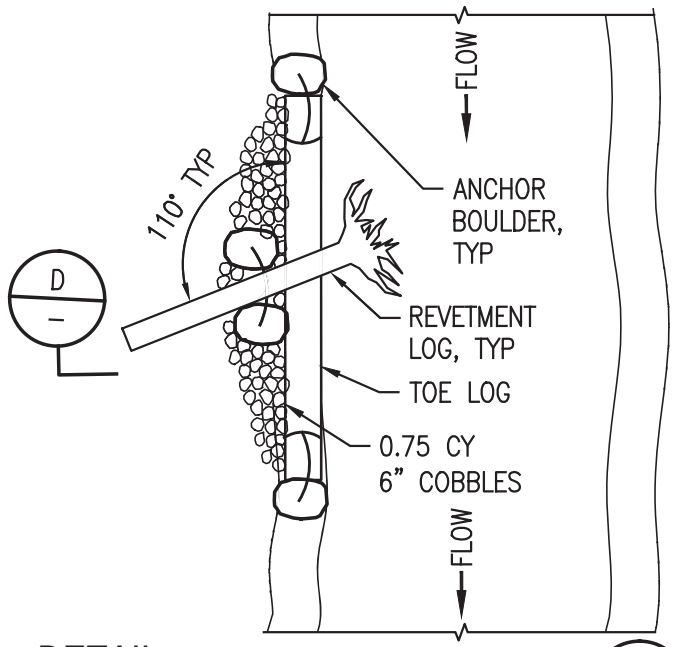

DETAIL 2 –

TOE LOG AND REVETMENT LOG
SCALE: NTS

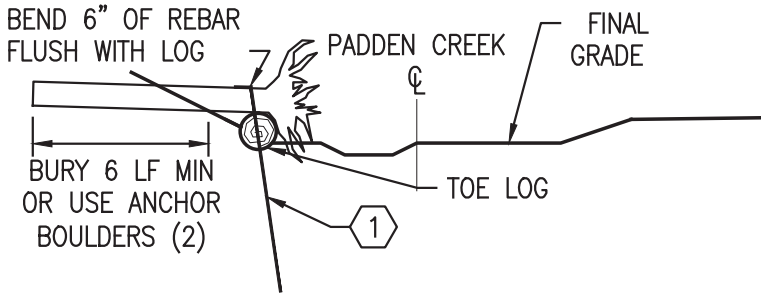

SECTION D –

TOE LOG AND REVETMENT LOG
SCALE: NTS

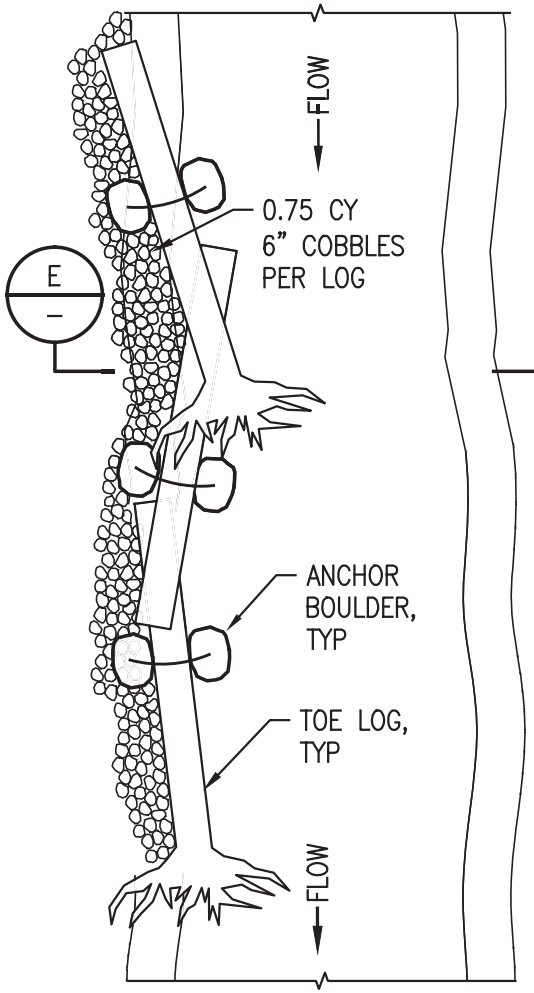

DETAIL 3 –

TOE LOG
SCALE: NTS

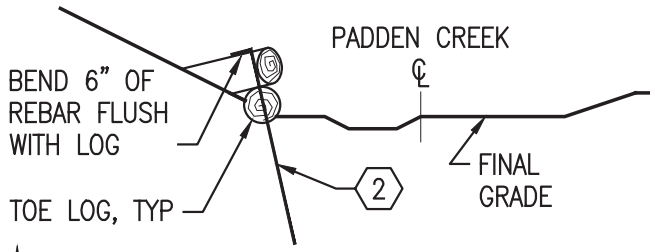

SECTION E –

TOE LOGS
SCALE: NTS

GENERAL NOTES

1. WHEN SINGLE TOE LOG IS USED, PLACE LOG AT TOE OF SLOPE. WHEN TOE LOGS ARE USED IN SEQUENCE, THE UPSTREAM LOG SHALL OVER LAP THE DOWNSTREAM LOG AND REBAR SHALL BE USED TO PIN THE LOGS TOGETHER AT THE OVERLAP AS SHOWN.
2. TOE LOG SHALL INCLUDE ROOTWAD WHERE SHOWN ON PLANS.

KEYED NOTES

(1) WHEN REVETMENT LOGS ARE PLACED OVER TOE LOGS, PIN LOGS TOGETHER WITH #6 REBAR. EXTEND REBAR INTO EXISTING GROUND 6' MIN OR TO THE POINT OF REFUSAL.

(2) WHEN TOE LOGS ARE PLACED IN SEQUENCE, PIN LOGS TOGETHER WITH #6 REBAR. EXTEND REBAR INTO EXISTING GROUND 6' MIN OR TO THE POINT OF REFUSAL.

REFERENCE: APPLICANT: CITY OF BELLINGHAM	LOCATION: VICINITY OF OLD FAIRHAVEN PARKWAY BETWEEN 17TH ST AND 22ND ST, BELLINGHAM, WA	PROPOSED PROJECT: PADDEN CREEK DAYLIGHTING PROJECT	**TYPICAL STREAM HABITAT DETAILS – 2 OF 3** DATE: SHEET **15** OF 36

Featherstone, John L. – 10/18/2013 1:33:08 PM – \\corp.leidos.com\ESG\PRJ\ECI\1798-SEA\001446 BELLINGHAM WA CITY OF\2651111030 Padden Creek Daylighting Project\Data Analytical\CADD\2a_JARPA\16-TYPICAL STREAM HABITAT DETAILS, 3 OF 4.dwg

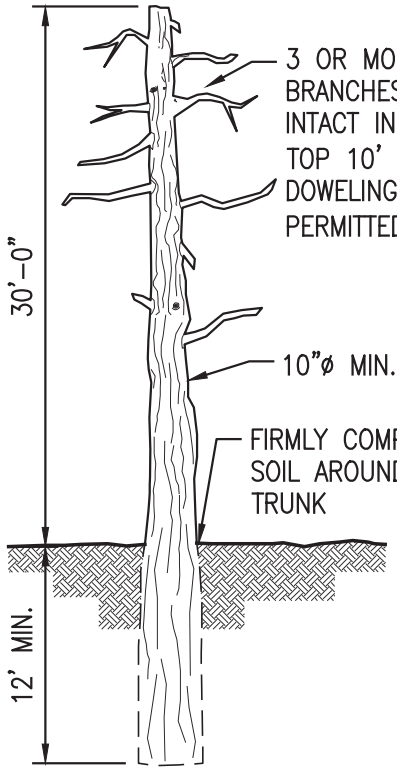

DETAIL 1
STANDING SNAG
SCALE: NTS

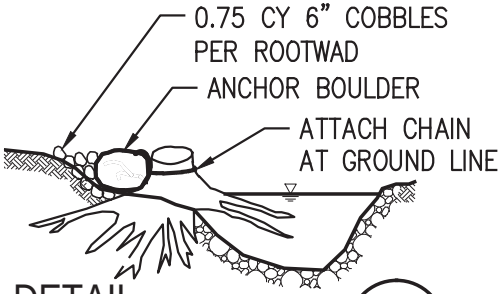

DETAIL 2
ROOTWAD
SCALE: NTS

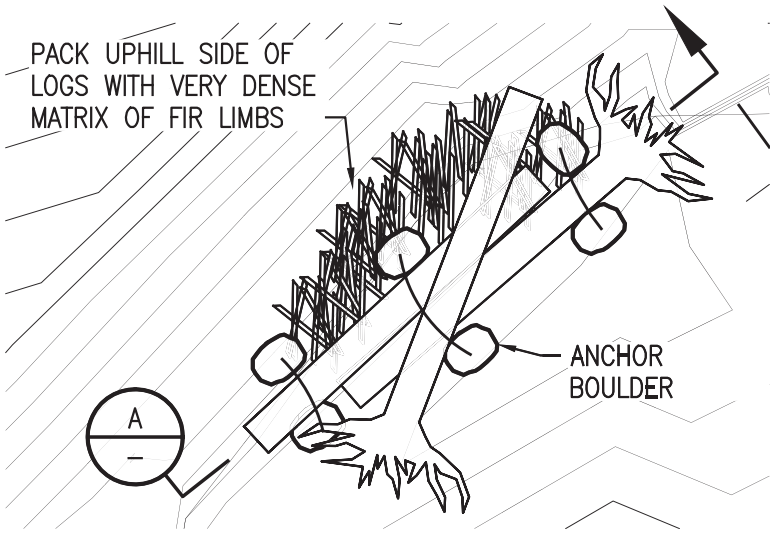

DETAIL 3
LOG JAM
SCALE: NTS

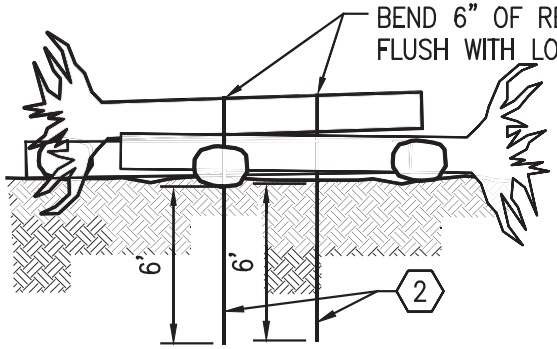

SECTION A
LOG JAM
SCALE: NTS

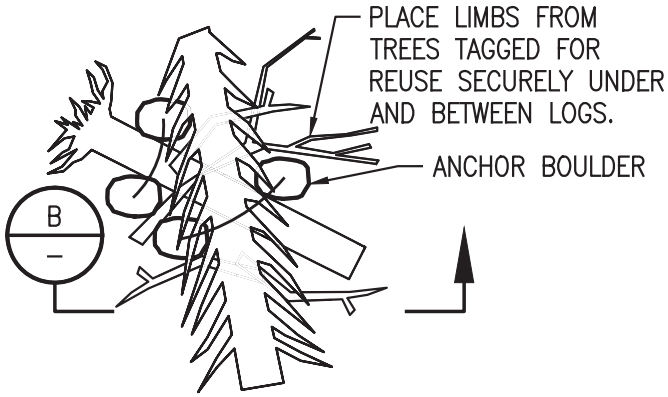

DETAIL 5
LOG PAIR
SCALE: NTS

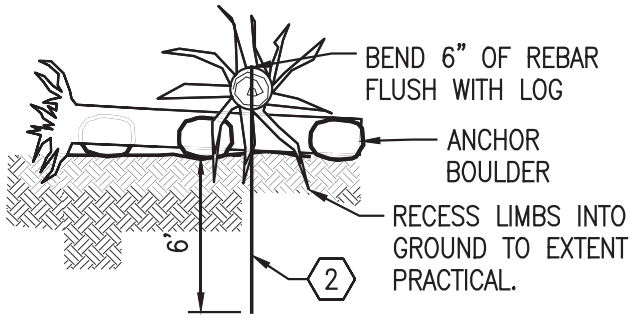

SECTION B
LOG PAIR
SCALE: NTS

KEYED NOTES

1. WHEN ROOTWAD IS LOCATED ON FLOODPLAIN ROOTWAD SHALL BE PLACED ON THE SURFACE NOT BURIED.
2. PIN LOGS TOGETHER WITH # 6 REBAR. EXTEND REBAR INTO EXISTING GROUND 6' MIN OR TO THE POINT OF REFUSAL.

REFERENCE: APPLICANT: CITY OF BELLINGHAM	LOCATION: VICINITY OF OLD FAIRHAVEN PARKWAY BETWEEN 17TH ST AND 22ND ST, BELLINGHAM, WA	PROPOSED PROJECT: PADDEN CREEK DAYLIGHTING PROJECT	**TYPICAL STREAM HABITAT DETAILS – 3 OF 3** DATE: SHEET **16** OF 36

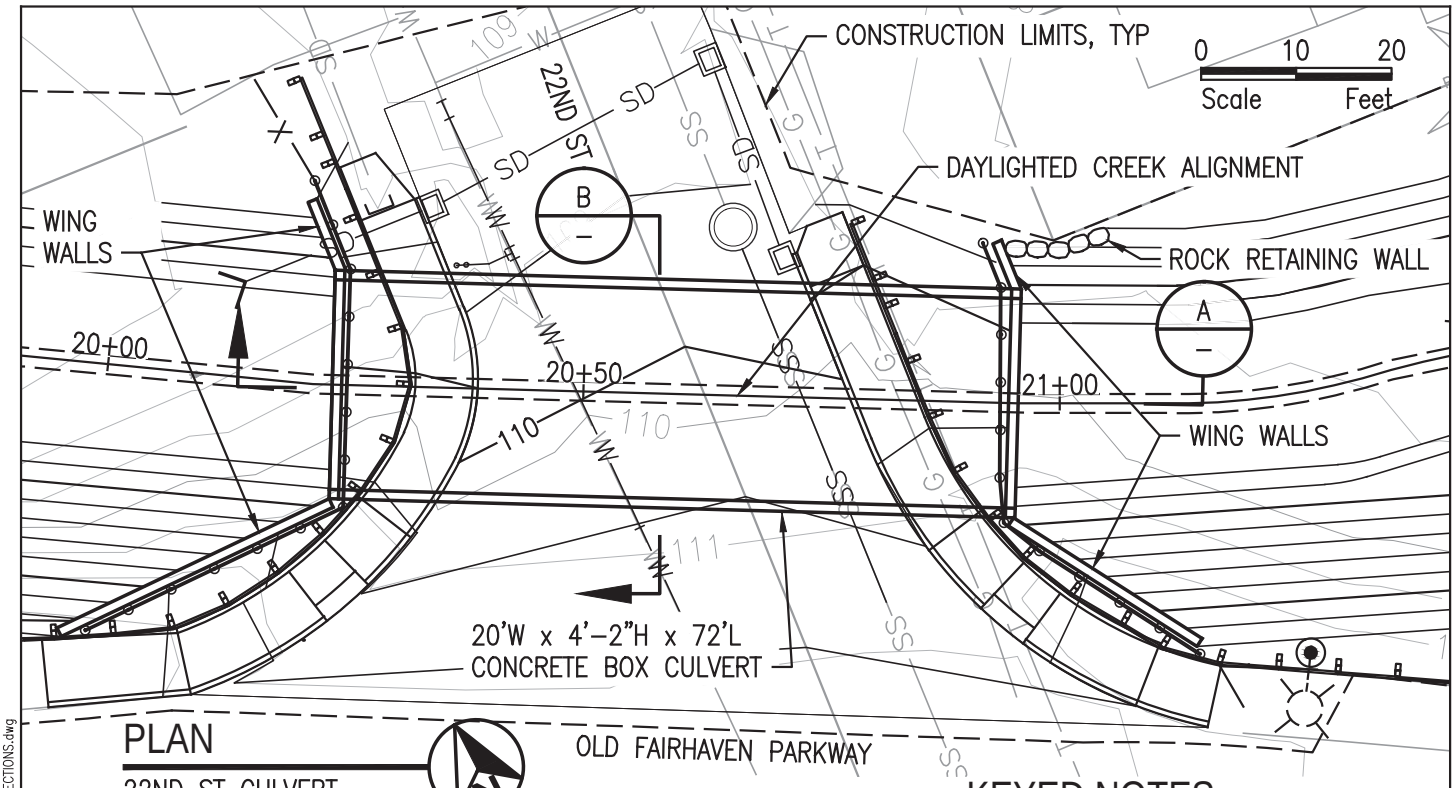

PLAN

22ND ST CULVERT
SCALE: 1"=20'

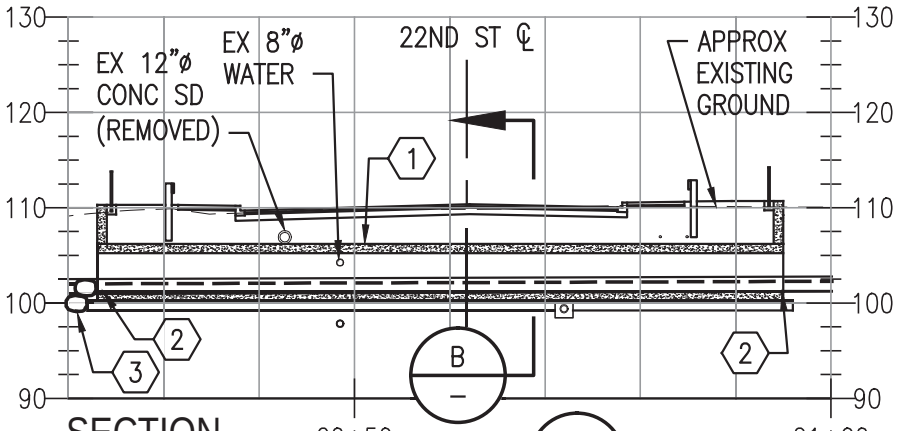

SECTION

22ND ST CULVERT
SCALE: 1"=20'

KEYED NOTES

1. 20'W x 4'-2"D x 72'L CONCRETE BOX CULVERT.
2. CULVERT INVERT EL=101.22. STREAMBED EL=102.02 AT WEST END, 102.27 AT EAST END. STREAMBED SEDIMENT DEPTH VARIES, MIN 9.6 INCHES AND WEST END. BOTTOM OF CULVERT EL=100.22 (ASSUMING 12" SLAB).
3. BED CONTROL ROCK, 12" MIN DEPTH.

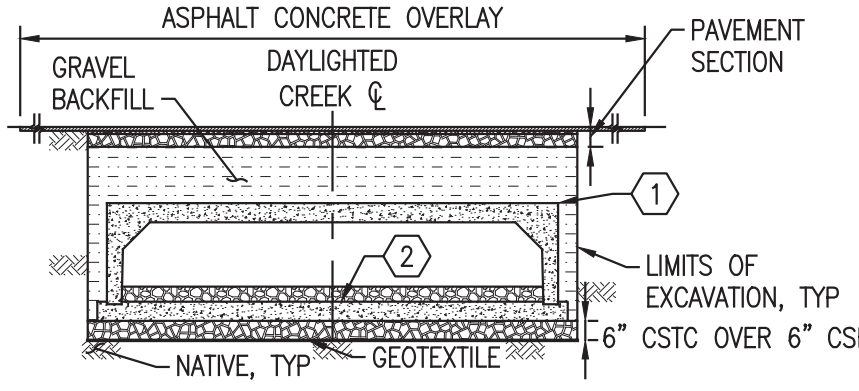

SECTION

SCALE: 1"=10'

0 5 10
Scale Feet

REFERENCE:

APPLICANT: CITY OF BELLINGHAM

LOCATION: VICINITY OF OLD FAIRHAVEN PARKWAY BETWEEN 17TH ST AND 22ND ST, BELLINGHAM, WA

CULVERT PLAN AND SECTIONS

PROPOSED PROJECT:
PADDEN CREEK DAYLIGHTING PROJECT

DATE:

SHEET **17** OF 36

Weber, Mary B. - 11/4/2013 8:30:22 AM - P:\ED\1798-SEA\001446 BELLINGHAM WA CITY OF\2651111030 Padden Creek Daylighting Project\Data Analytical\CADD\2a_JARPA\17-CULVERT PLAN & SECTIONS.dwg

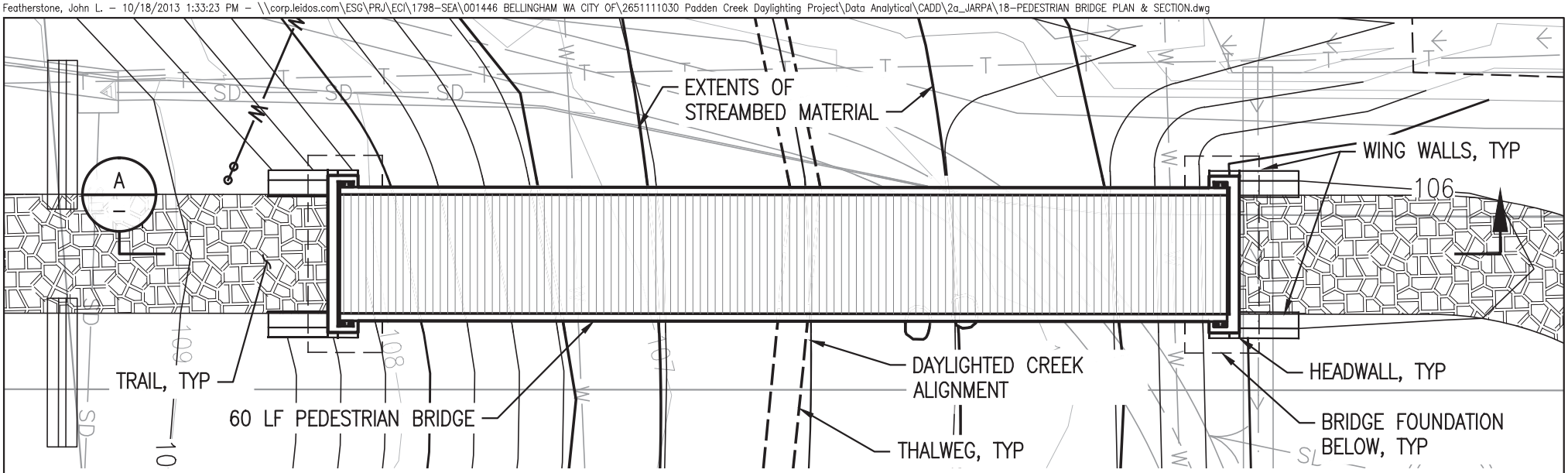

PLAN

PEDESTRIAN BRIDGE AND TRAIL
SCALE: 1"=10'

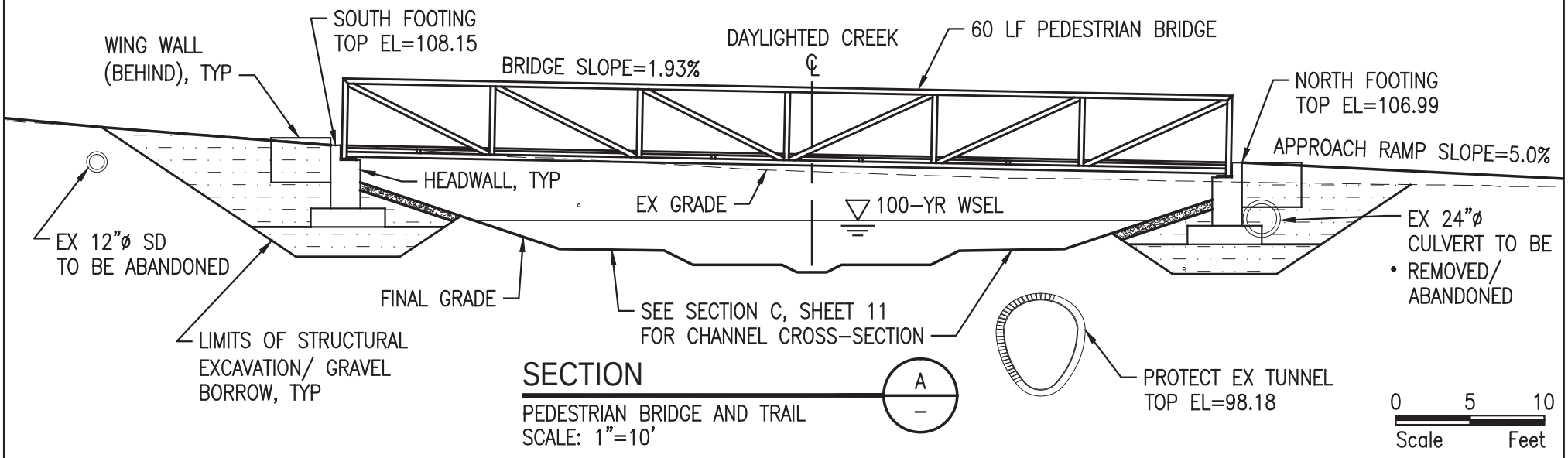

SECTION

PEDESTRIAN BRIDGE AND TRAIL
SCALE: 1"=10'

REFERENCE: APPLICANT: CITY OF BELLINGHAM	LOCATION: VICINITY OF OLD FAIRHAVEN PARKWAY BETWEEN 17TH ST AND 22ND ST, BELLINGHAM, WA	PROPOSED PROJECT: PADDEN CREEK DAYLIGHTING PROJECT	**PEDESTRIAN BRIDGE PLAN AND SECTION** DATE: SHEET **18** OF 36

Featherstone, John L. – 10/18/2013 1:33:25 PM – \\corp.leidos.com\ESG\PRJ\ECI\1798–SEA\001446 BELLINGHAM WA CITY OF\2651111030 Padden Creek Daylighting Project\Data Analytical\CADD\2a_JARPA\19–TUNNEL OUTLET.dwg

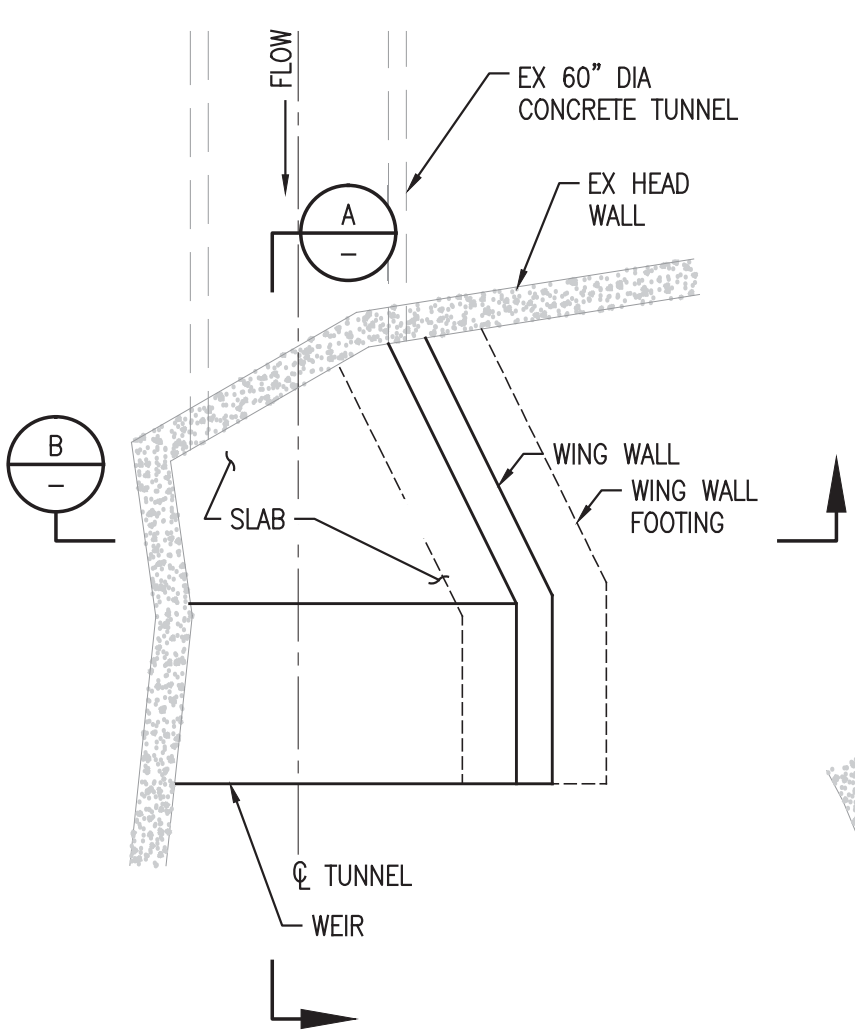

PLAN
TUNNEL OUTLET
SCALE: 3/16" = 1'–0"

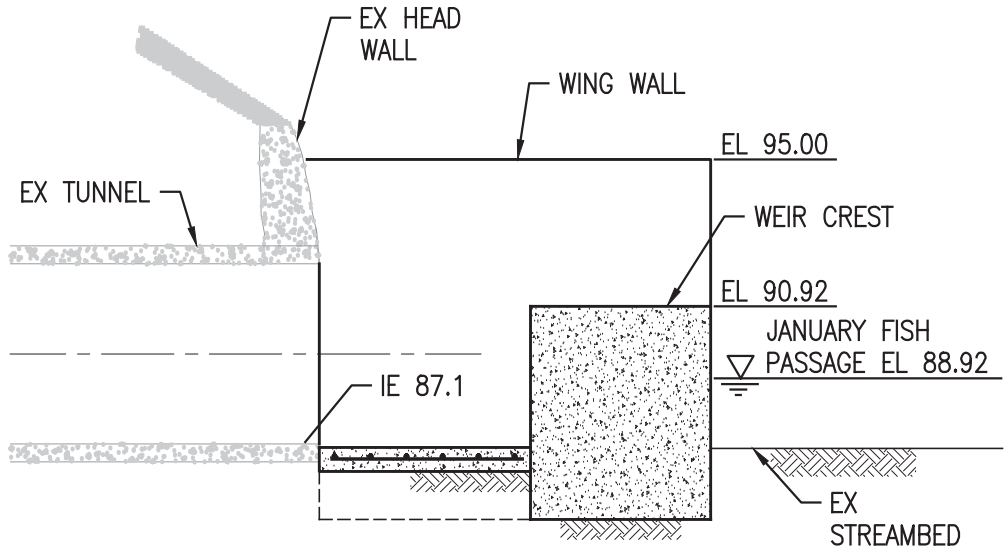

SECTION
TUNNEL OUTLET
SCALE: 3/16"=1'–0"

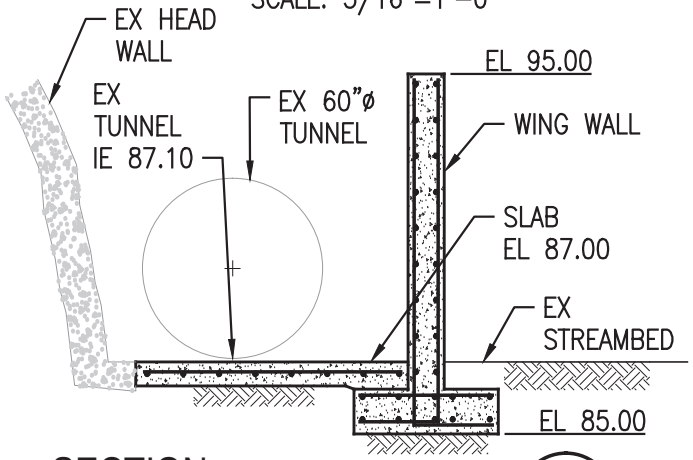

SECTION
TUNNEL OUTLET
SCALE: 3/16"=1'–0"

3/16"=1'–0"

0 4 8
Scale Feet

REFERENCE: APPLICANT: CITY OF BELLINGHAM	LOCATION: VICINITY OF OLD FAIRHAVEN PARKWAY BETWEEN 17TH ST AND 22ND ST, BELLINGHAM, WA	PROPOSED PROJECT: PADDEN CREEK DAYLIGHTING PROJECT	**TUNNEL OUTLET** DATE: SHEET **19** OF 36

Featherstone, John L. – 10/18/2013 1:33:27 PM – \\corp.leidos.com\ESG\PRJ\ECI\1798-SEA\001446 BELLINGHAM WA CITY OF\2651111030 Padden Creek Daylighting Project\Data Analytical\CADD\2a_JARPA\20-TUNNEL INLET.dwg

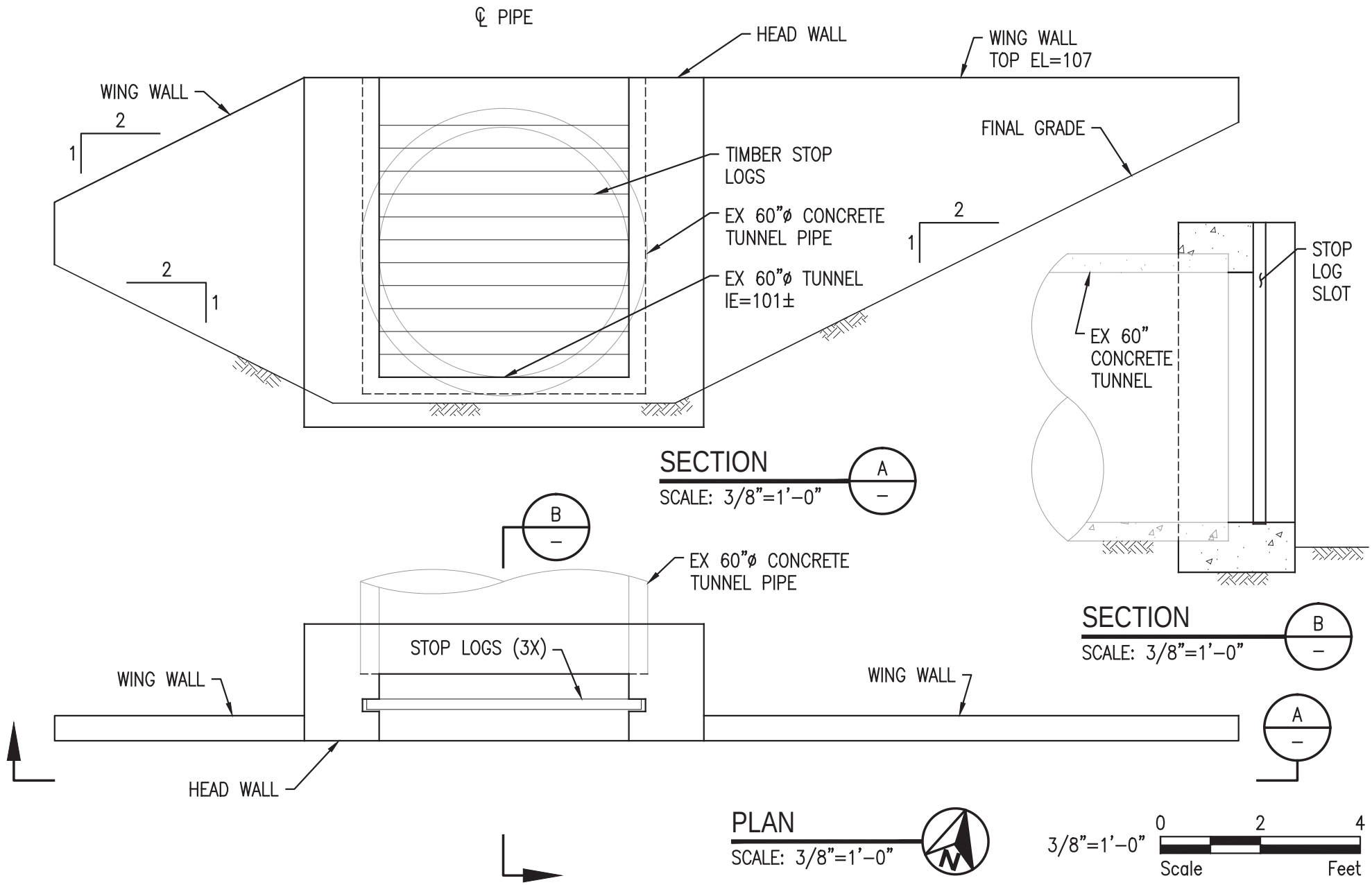

REFERENCE: APPLICANT: CITY OF BELLINGHAM	LOCATION: VICINITY OF OLD FAIRHAVEN PARKWAY BETWEEN 17TH ST AND 22ND ST, BELLINGHAM, WA	PROPOSED PROJECT: PADDEN CREEK DAYLIGHTING PROJECT	**TUNNEL INLET** DATE: SHEET **20** OF 36

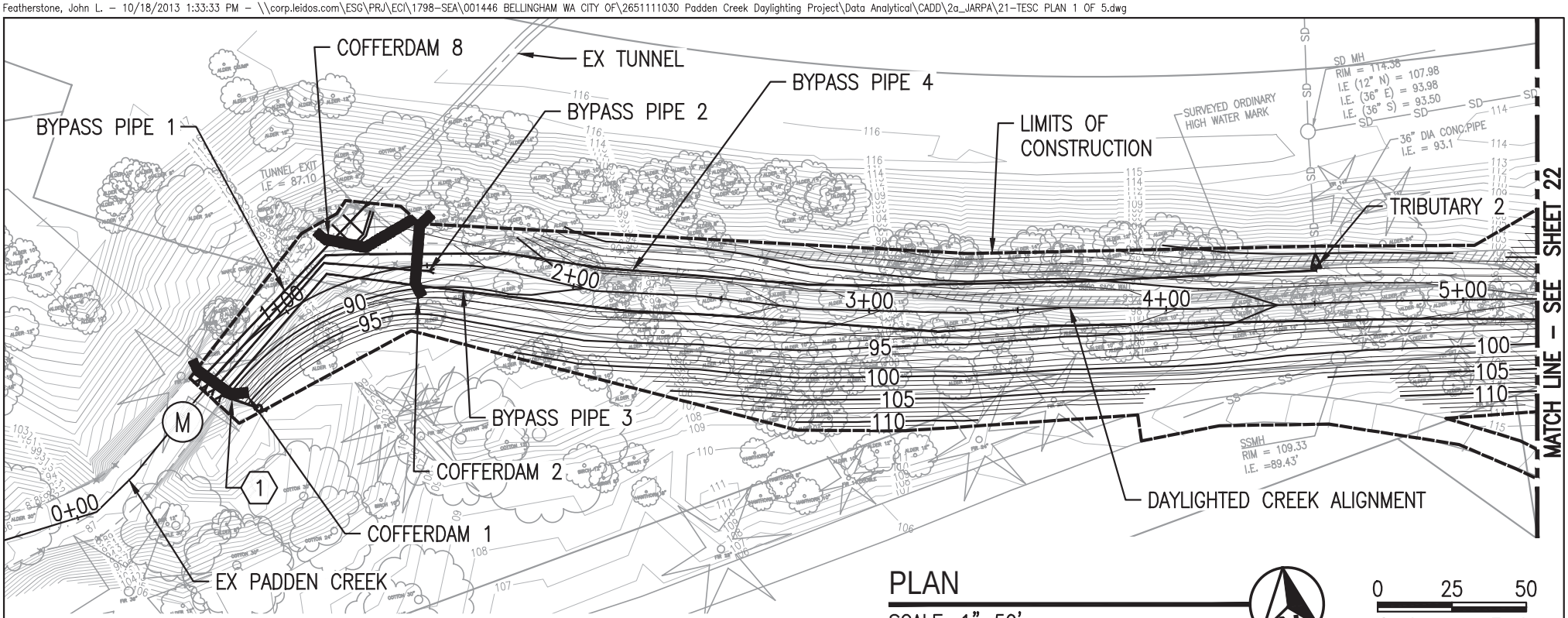

PLAN

SCALE: 1"=50'

N

0 25 50

Scale Feet

KEYED NOTES

(1) SILT FENCE PER COB STD PLAN EC-615 OR WATTLE PER WSDOT STD PLAN I-30.30.00.

GENERAL NOTES

1. MONITOR TURBIDITY AND pH AT MONITORING STATION. SEE SHEET 25 FOR UPSTREAM MONITORING LOCATION.

2. PLACE HIGH VISIBILITY CONSTRUCTION FENCING ALONG LIMITS OF CONSTRUCTION PER WSDOT STD PLAN I-10.10-01.

REFERENCE: APPLICANT: CITY OF BELLINGHAM	LOCATION: VICINITY OF OLD FAIRHAVEN PARKWAY BETWEEN 17TH ST AND 22ND ST, BELLINGHAM, WA	PROPOSED PROJECT: PADDEN CREEK DAYLIGHTING PROJECT	**TESC PLAN – 1 OF 5** DATE: SHEET **21** OF 36

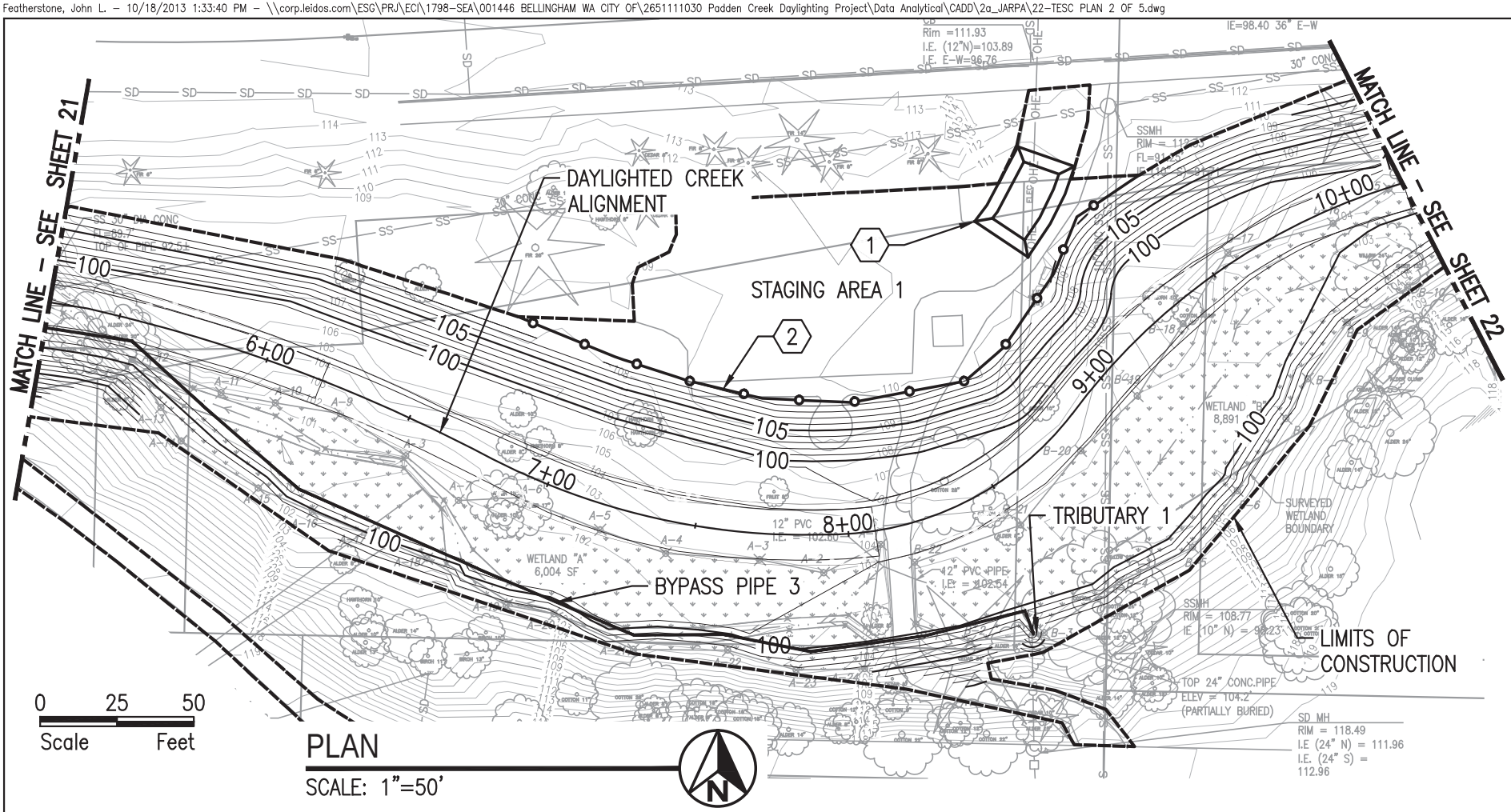

PLAN

SCALE: 1"=50'

KEYED NOTES

1. WHEEL WASH PER CITY OF BELLINGHAM STANDARD PLAN EC-612.
2. SILT FENCE PER COB STD PLAN EC-615 OR WATTLE PER WSDOT STD PLAN I-30.30.00.

GENERAL NOTES

1. PLACE HIGH VISIBILITY CONSTRUCTION FENCING ALONG LIMITS OF CONSTRUCTION PER WSDOT STD PLAN I-10.10-01.

REFERENCE: APPLICANT: CITY OF BELLINGHAM	LOCATION: VICINITY OF OLD FAIRHAVEN PARKWAY BETWEEN 17TH ST AND 22ND ST, BELLINGHAM, WA	PROPOSED PROJECT: PADDEN CREEK DAYLIGHTING PROJECT	**TESC PLAN – 2 OF 5** DATE: SHEET **22** OF 36

GENERAL NOTES

1. PLACE HIGH VISIBILITY CONSTRUCTION FENCING ALONG LIMITS OF CONSTRUCTION PER WSDOT STD PLAN I-10.10-00.

KEYED NOTES

1. USE WHEEL WASH PER CITY OF BELLINGHAM STANDARD PLAN EC-612.
2. SILT FENCE PER COB STD PLAN EC-615 OR WATTLE PER WSDOT STD PLAN I-30.30-00.
3. DIVERT FLOW AS NEEDED TO STORM DRAIN OR SEWER WITH THE PERMISSION OF THE CITY.
4. DIVERT DITCH FLOW INTO TUNNEL AS NECESSARY.

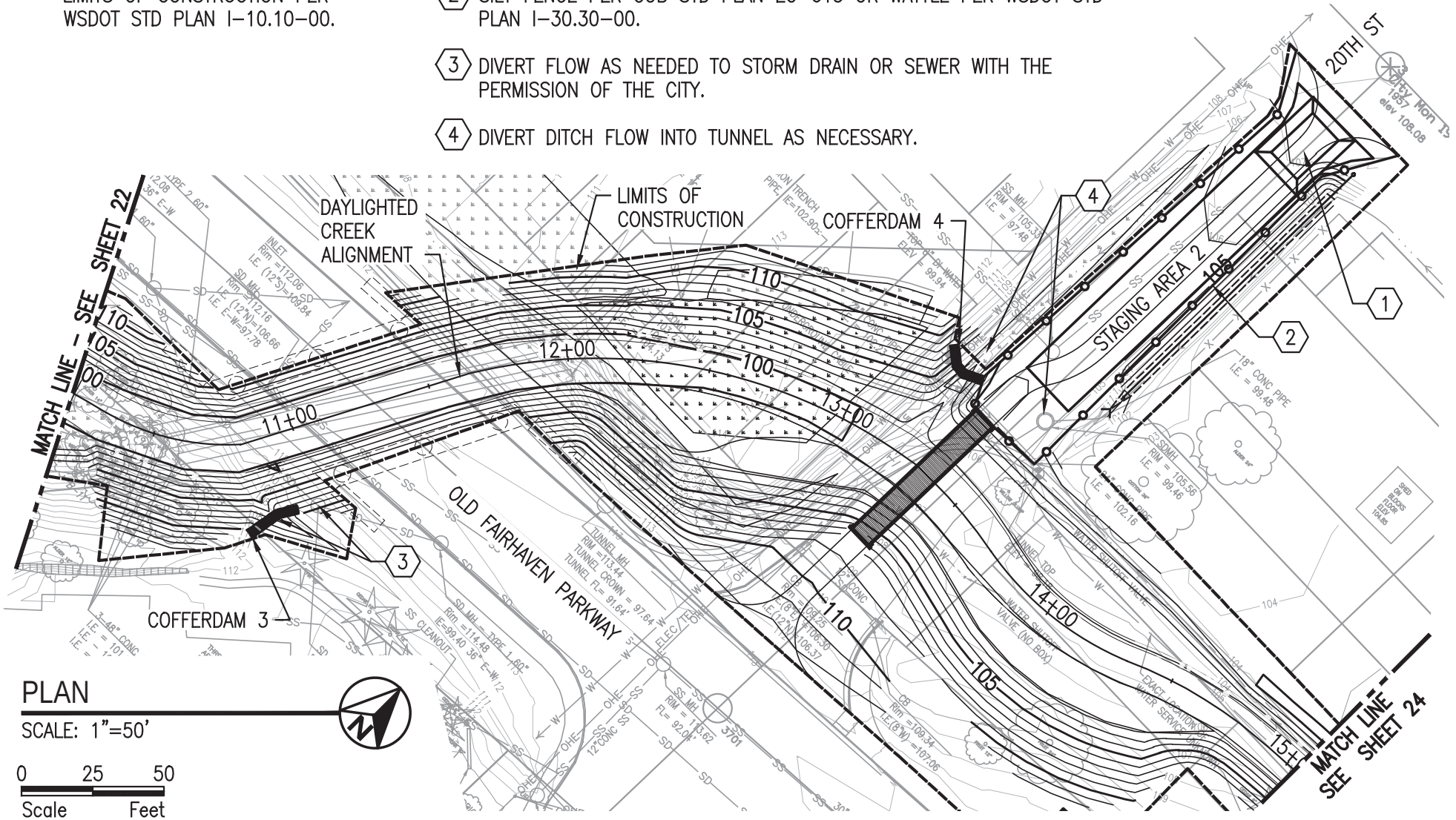

PLAN

SCALE: 1"=50'

0 25 50

Scale Feet

REFERENCE: APPLICANT: CITY OF BELLINGHAM	LOCATION: VICINITY OF OLD FAIRHAVEN PARKWAY BETWEEN 17TH ST AND 22ND ST, BELLINGHAM, WA	PROPOSED PROJECT: PADDEN CREEK DAYLIGHTING PROJECT	**TESC PLAN – 3 OF 5** DATE: SHEET **23** OF 36

GENERAL NOTES

1. PLACE HIGH VISIBILITY CONSTRUCTION FENCING ALONG LIMITS OF CONSTRUCTION.

KEYED NOTES

(1) INSTALL WHEEL WASH PER CITY OF BELLINGHAM STANDARD PLAN EC–612.

(2) SILT FENCE PER COB STD PLAN EC–615 OR WATTLE PER WSDOT STD PLAN I–30.30–00.

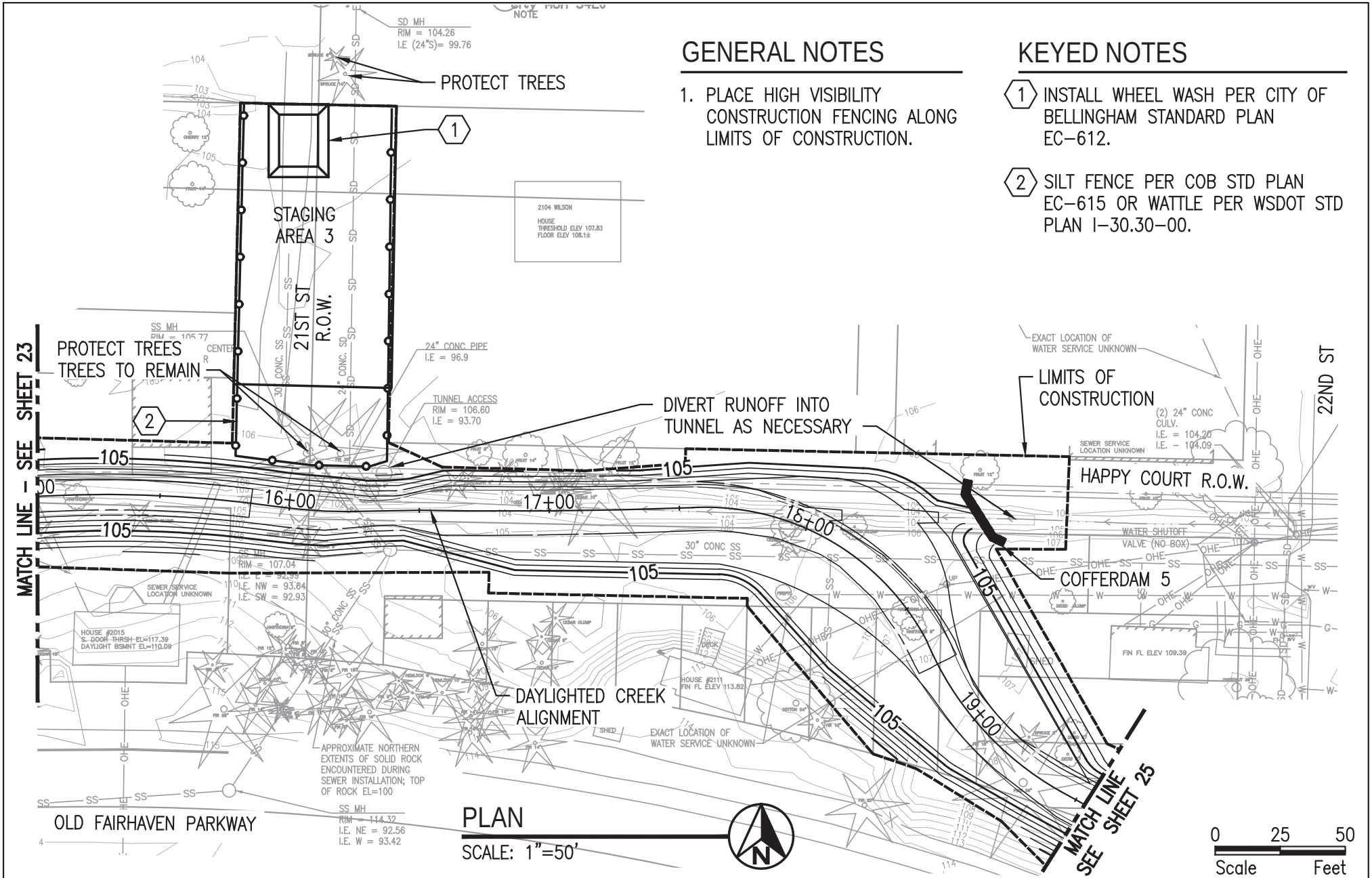

REFERENCE: APPLICANT: CITY OF BELLINGHAM	LOCATION: VICINITY OF OLD FAIRHAVEN PARKWAY BETWEEN 17TH ST AND 22ND ST, BELLINGHAM, WA	PROPOSED PROJECT: PADDEN CREEK DAYLIGHTING PROJECT	**TESC PLAN – 4 OF 5** DATE: SHEET **24** OF 36

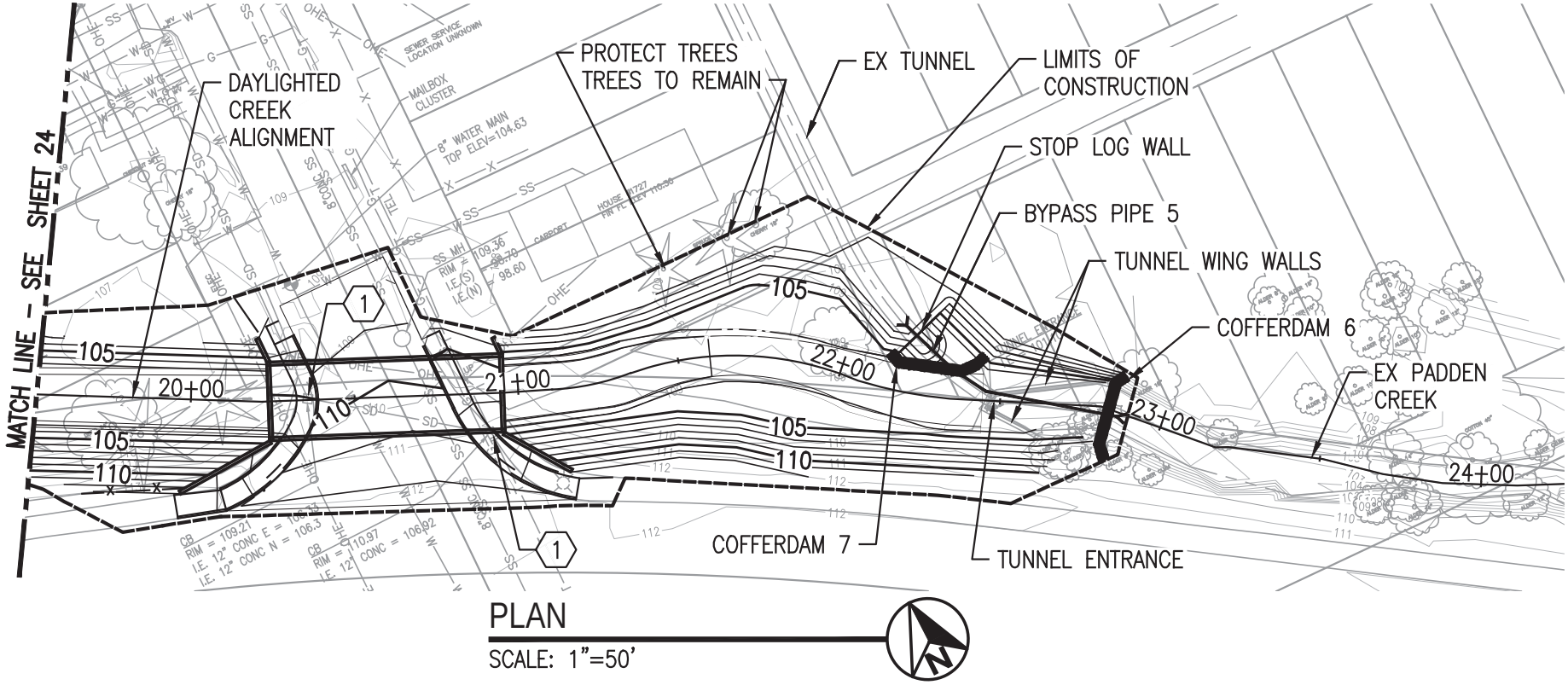

PLAN

SCALE: 1"=50'

GENERAL NOTES

1. PLACE HIGH VISIBILITY CONSTRUCTION FENCING ALONG LIMITS OF CONSTRUCTION.
2. MONITOR TURBIDITY AND pH AT MONITORING STATION. SEE SHEET T1 FOR DOWNSTREAM LOCATION.

KEYED NOTES

(1) INSTALL CATCH BASIN INSERTS PER CITY OF BELLINGHAM STANDARD PLAN EC–620.

0 25 50
Scale Feet

REFERENCE: APPLICANT: CITY OF BELLINGHAM	LOCATION: VICINITY OF OLD FAIRHAVEN PARKWAY BETWEEN 17TH ST AND 22ND ST, BELLINGHAM, WA	PROPOSED PROJECT: PADDEN CREEK DAYLIGHTING PROJECT	**TESC PLAN – 5 OF 5** DATE: SHEET **25** OF 36

TEMPORARY EROSION AND SEDIMENT CONTROL NOTES

1. THE IMPLEMENTATION OF THE TESC PLANS, AND THE CONSTRUCTION, MAINTENANCE, REPLACEMENT, UPGRADING, AND REMOVAL OF THE TESC FACILITIES IS THE RESPONSIBILITY OF THE CONTRACTOR UNTIL ALL CONSTRUCTION IS APPROVED AND THE SITE IS STABILIZED.

2. THE TESC FACILITIES MUST BE CONSTRUCTED PRIOR TO, AND IN CONJUNCTION WITH, ALL WORK SO AS TO ENSURE THAT THE TRANSPORT OF SEDIMENT IS MINIMIZED.

3. THE TESC FACILITIES SHALL BE INSPECTED WEEKLY DURING THE DRY SEASON AND DAILY DURING THE WET SEASON BY A CESCL-QUALIFIED CONTRACTOR'S REPRESENTATIVE, AND MAINTAINED TO ENSURE CONTINUED PROPER FUNCTIONING. ALL TESC MEASURES SHALL BE IN COMPLIANCE WITH THE NPDES PERMIT. THE CONTRACTOR SHALL TRACK THE INSPECTION RESULTS AND MAINTENANCE ACTIVITIES IN THE MONITORING LOG.

4. TO REDUCE THE POTENTIAL FOR EROSION OF EXPOSED SOILS, OR WHEN RAINY SEASON CONSTRUCTION IS PERMITTED, THE FOLLOWING BEST MANAGEMENT PRACTICES (BMPS) ARE REQUIRED:
   - PRESERVE NATURAL VEGETATION FOR AS LONG AS POSSIBLE OR AS REQUIRED BY THE CLEARING AND GRADING INSPECTOR.
   - PROTECT EXPOSED SOIL USING PLASTIC, EROSION CONTROL BLANKETS, STRAW OR MULCH, OR AS DIRECTED BY THE CLEANING AND GRADING INSPECTOR.
   - INSTALL A TEMPORARY SEDIMENT POND, A SERIES OF SEDIMENT TANKS, TEMPORARY FILTER VAULTS, OR OTHER SEDIMENT CONTROL FACILITIES.

5. PRIOR TO CLEARING AND GRADING, STRAW WATTLES MUST BE INSTALLED IN ACCORDANCE WITH WSDOT STD. PLAN I-30.30-00 AND SHALL BE LOCATED AS SHOWN ON THE APPROVED PLANS OR PER THE CLEARING AND GRADING INSPECTOR, ALONG SLOPE CONTOURS AND DOWN-SLOPE OF ANY AREAS DISTURBED DURING CONSTRUCTION.

6. CLEARING SHALL BE LIMITED TO THE AREAS WITHIN THE APPROVED CLEARING LIMITS. EXPOSED SOILS MUST BE COVERED AT THE END OF EACH WORKING DAY WHEN WORKING FROM OCTOBER 1ST THOUGH APRIL 30TH (WET SEASON). FROM MAY 1ST THOUGH SEPTEMBER 30TH (DRY SEASON), EXPOSED SOILS MUST BE COVERED WHEN RAIN IS FORECASTED.

7. THE CONTRACTOR SHALL BE AWARE OF THE FOLLOWING ESTIMATED CONSTRUCTION SEASON PEAK FLOWS FOR PADDEDN CREEK AND THE TWO TRIBUTARIES TO PADDEN CREEK:
   PADDEN CREEK
   2-YR = 62 CFS
   10-YR = 67 CFS
   TRIBUTARY 1:
   2-YR = 10 CFS
   10-YR = 19 CFS
   TRIBUTARY 2:
   2-YR = 1 CFS
   10-YR = 2 CFS
   THE CONTRACTOR SHALL TAKE ALL ACTIONS TO ANTICIPATE CHANGES IN WEATHER CONDITIONS THAT MAY AFFECT FLOWS AND ADJUST BYPASS PLAN ACCORDINGLY.

8. ANY AREAS OF EXPOSED SOILS THAT WILL NOT BE DISTURBED FOR SEVEN DAYS OR MORE, SHALL BE STABILIZED WITH APPROVED TESC METHODS (E.G., SEEDING, MULCHING, PLASTIC COVERING). WHERE STRAW MULCH FOR TEMPORARY EROSION CONTROL IS REQUIRED, IT SHALL BE APPLIED AT A MINIMUM THICKNESS OF 2 TO 3 INCHES. PLASTIC COVERING SHALL BE PER COB STD PLAN EC-650.

REFERENCE: APPLICANT: CITY OF BELLINGHAM	LOCATION: VICINITY OF OLD FAIRHAVEN PARKWAY BETWEEN 17TH ST AND 22ND ST, BELLINGHAM, WA	PROPOSED PROJECT: PADDEN CREEK DAYLIGHTING PROJECT	**TESC NOTES – 1 OF 2** DATE: SHEET **26** OF 36

TEMPORARY EROSION AND SEDIMENT CONTROL NOTES (CONT.)

9. THE TESC FACILITIES ON INACTIVE SITES SHALL BE INSPECTED AND MAINTAINED A MINIMUM OF ONCE A MONTH, OR WITHIN FORTY-EIGHT (48) HOURS FOLLOWING A STORM EVENT.

10. AT NO TIME SHALL MORE THAN 3 FEET OF SEDIMENT BE ALLOWED TO ACCUMULATE WITHIN A SEDIMENT TRAP.

11. REFUELING AND MAINTENANCE OF CONSTRUCTION EQUIPMENT SHALL OCCUR A MIN OF 50 FEET FROM ANY STREAM OHWM.

12. A HARD-SURFACE CONSTRUCTION ACCESS PAD IS REQUIRED. THIS PAD MUST REMAIN IN PLACE UNTIL CONSTRUCTION IS COMPLETED.

13. THE CONTRACTOR MUST MAINTAIN A SWEEPER ON SITE DURING EARTHWORK AND IMMEDIATELY REMOVE SOIL THAT HAS BEEN TRACKED ONTO PAVED AREAS AS A RESULT OF CONSTRUCTION. THE PAVEMENT SHALL BE CLEANED AT THE END OF EACH CONSTRUCTION DAY IF SEDIMENT IS DEPOSITED ONTO THE PAVEMENT DUE TO CONSTRUCTION ACTIVITY AND/OR VEHICLES.

14. ALL SANDBAGS SHALL BE FILLED WITH WASHED GRAVEL; SAND IS NOT ALLOWED.

15. IN-STREAM WORK SHALL BE LIMITED TO THE FISH WINDOW: XX THROUGH XX.

16. THE CONTRACTOR SHALL MONITOR DISCHARGE FROM THE SITE. SITE DISCHARGE SHALL MEET ALL LOCAL, CITY, STATE AND FEDERAL REQUIREMENTS FOR WATER QUALITY INCLUDING TURBIDITY AND PH.

17. SOIL STOCKPILES MUST BE STABILIZED FROM EROSION BY USING A COVERING TESC BMP METHOD SUCH AS PLASTIC SHEETING AND LOCATED AWAY FROM STORM DRAIN INLETS, DRAINAGE CHANNELS AND WATERWAYS. PLASTIC COVERING SHALL BE PER COB STD PLAN EC-650.

18. CONCRETE TRUCK CHUTES, PUMPS AS WELL AS HAND TOOLS, INCLUDING, BUT NOT LIMITED TO SCREEDS, SHOVELS, RAKES, FLOATS AND TROWELS, SHALL BE WASHED OUT ONLY INTO FORMED AREAS AWAITING INSTALLATION OF CONCRETE OR ASPHALT; OR, WITH THE APPROVAL OF THE ENGINEER, AN AREA TO BE EXCAVATED THAT DOES NOT RUNOFF INTO A CRITICAL AREA. WHEN NO FORMED AREAS OR AREAS TO BE EXCAVATED ARE AVAILABLE, WASHDOWN AND LEFTOVER PRODUCT SHALL BE CONTAINED IN A LINED CONTAINER. CONTAINED WASHDOWN WATER AND CONCRETE SHALL BE DISPOSED OF IN A MANNER THAT DOES NOT VIOLATE GROUNDWATER OR SURFACE WATER QUALITY STANDARDS. UNUSED CONCRETE REMAINING IN THE TRUCK AND PUMP SHALL BE RETURNED TO THE ORIGINATING BATCH PLANT FOR RECYCLING.

19. EQUIPMENT THAT CANNOT BE EASILY MOVED SHALL ONLY BE WASHED IN AREAS THAT DO NOT DIRECTLY DRAIN TO NATURAL OR CONSTRUCTED STORMWATER CONVEYANCES.

20. WASHDOWN WATER SHALL NOT DRAIN DIRECTLY TO NATURAL OR CONSTRUCTED STORMWATER CONVEYANCES.

21. ALL TEMPORARY EROSION AND SEDIMENT CONTROL BMPS SHALL BE REMOVED WITHIN 30 DAYS AFTER FINAL SITE STABILIZATION IS ACHIEVED OR AFTER THE TEMPORARY BMPS ARE NO LONGER NEEDED. TRAPPED SEDIMENT SHALL BE REMOVED OR STABILIZED ON SITE. DISTURBED SOIL RESULTING FROM REMOVAL OF BMPS OR VEGETATION SHALL BE PERMANENTLY STABILIZED.

Featherstone, John L. – 10/18/2013 1:34:02 PM – \\corp.leidos.com\ESG\PRJ\ECI\1798-SEA\001446 BELLINGHAM WA CITY OF\2651111030 Padden Creek Daylighting Project\Data Analytical\CADD\2a_JARPA\28-CONST SEQUENCE.dwg

RECOMMENDED CONSTRUCTION SEQUENCE

1. PREPARE CONSTRUCTION STORMWATER POLLUTION PREVENTION PLAN AND SUBMIT IT AT THE PRECONSTRUCTION CONFERENCE.

2. SURVEY AND FLAG CONSTRUCTION LIMITS WITH HIGH VISIBILITY FENCE ADJACENT TO CRITICAL AREAS. LATH AND FLAGGING MAY BE USED ELSEWHERE. FLAG TREES TO BE SAVED OR REMOVED AND REUSED FOR THE APPROVAL OF THE ENGINEER. PROTECT TREES TO REMAIN.

3. ACTIVATE WATER QUALITY MONITORING PLAN.

4. INSTALL TESC MEASURES.

5. INSTALL TEMPORARY TEMPORARY GRAVEL BAG COFFERDAMS 1, 2 AND 8 AND TEMPORARY DIVERSION PIPES 1 AND 2 TO INTERCEPT FLOWS WITHIN CONSTRUCTION LIMITS UPSTREAM OF PROPOSED CLEARING AND GRADING LIMITS. DISCHARGE FLOW WITHIN CONSTRUCTION LIMITS DOWNSTREAM OF PROPOSED CLEARING AND GRADING LIMITS. BYPASSED FLOW SHALL BE DISCHARGED IN A MANNER WHICH PREVENTS RE-SUSPENSION OF SEDIMENT OR EROSION IN THE CREEK.

6. FISH BLOCK NETS AND HAND NET FISH FROM WORK AREA WITHIN PADDEN CREEK PER PERMIT REQUIREMENTS.

7. ACTIVATE TEMPORARY CREEK BYPASS SYSTEM 1. PUMP ANY WATER REMAINING IN THE BYPASSED STREAMBED TO BAKER TANKS FOR TREATMENT AND DISCHARGE TO EXISTING STORM DRAIN LINE OR TO THE SANITARY SEWER, WITH THE PERMISSION OF THE CITY. THE CONTRACTOR IS RESPONSIBLE FOR ANY PERMITS ASSOCIATED WITH DISCHARGE.

8. COMPLETE CHANNEL RESTORATION WORK WITHIN PADDEN CREEK DOWNSTREAM OF THE TUNNEL EXIT (FROM DOWNSTREAM END OF PROJECT TO ABOUT STATION 1+45.

9. REMOVE TEMPORARY COFFERDAM 1 AND 7 AND BYPASS PIPES 1 AND 2. RESTORE CREEK FLOW FROM TUNNEL TO PADDEN CREEK.

10. INSTALL COFFERDAMS 3, 4 AND 5, BYPASS PIPES 3 AND 4. DISCHARGE FLOW WITHIN CONSTRUCTION LIMITS DOWNSTREAM OF PROPOSED WORK AREA. BYPASSED FLOW SHALL BE DISCHARGED IN A MANNER WHICH PREVENTS RE-SUSPENSION OF SEDIMENT OR EROSION IN THE CREEK.

11. REROUTE SIDE DRAINAGES AS NEEDED TO THE EXISTING STORM DRAIN OR SANITARY SEWER SYSTEM WITH THE PERMISSION OF THE CITY.

12. COMPLETE CHANNEL WORK AND RESTORATION FROM STA 1+45 TO 22+25 INCLUDING INSTALLATION OF CULVERT AT 22ND STREET, PEDESTRIAN BRIDGE AND STABILIZING CHANNEL AND BANKS.

13. ONCE THE CHANNEL AND BANKS ARE STABILIZED AND WITH THE PERMISSION OF THE ENGINEER, REMOVE TEMPORARY COFFERDAMS 2, 3, 4 AND 5 AND TEMPORARY PIPES 3 AND 4.

14. WHEN THE CREEK IS COMPLETELY STABILIZED AND WITH THE PERMISSION OF THE ENGINEER, INSTALL COFFER DAM 6 AND BYPASS PIPE 5 DIRECTING FLOW INTO THE TUNNEL.

15. INSTALL FISH BLOCK NETS AND HAND NET FISH FROM WORK AREA.

16. COMPLETE CHANNEL RESTORATION INCLUDING REMOVAL OF 30 FEET OF TUNNEL AND TUNNEL ENTRANCE WING WALLS.

17. WHEN THE FINAL SECTION OF CREEK RESTORATION IS COMPLETELY STABILIZED AND WITH THE PERMISSION OF THE ENGINEER, REMOVE COFFERDAM 6 AND BYPASS PIPE 5. REROUTE PADDEN CREEK FLOW INTO THE NEWLY CONSTRUCTED CHANNEL.

18. INSTALL COFFERDAM 7 AMD BLOCK FLOW INTO THE TUNNEL.

19. INSTALL STOP LOG WALL TO BLOCK FLOW INTO THE TUNNEL.

20. REMOVE COFFERDAM 7.

21. INSTALL COFFERDAM 8 AND TEMPORARY BYPASS PIPE 1.

22. CONSTRUCT TUNNEL OUTLET.

23. REMOVE COFFERDAM 8 AND TEMPORARY BYPASS PIPE 1.

24. PERFORM FINAL RESTORATION AND CLEAN UP. ANY AREAS OF EXPOSED SOILS SHALL BE STABILIZED AND SEEDED.

25. REMOVE TESC MEASURES ONLY AFTER SITE IS STABILIZED AND VEGETATION HAS BEEN ESTABLISHED. TESC MEASURES REMOVAL MUST HAVE PRIOR APPROVAL FROM THE PROJECT ENGINEER AND CESCL.

REFERENCE: APPLICANT: CITY OF BELLINGHAM	LOCATION: VICINITY OF OLD FAIRHAVEN PARKWAY BETWEEN 17TH ST AND 22ND ST, BELLINGHAM, WA	PROPOSED PROJECT: PADDEN CREEK DAYLIGHTING PROJECT	**RECOMMENDED CONSTRUCTION SEQUENCE** DATE: SHEET **28** OF 36

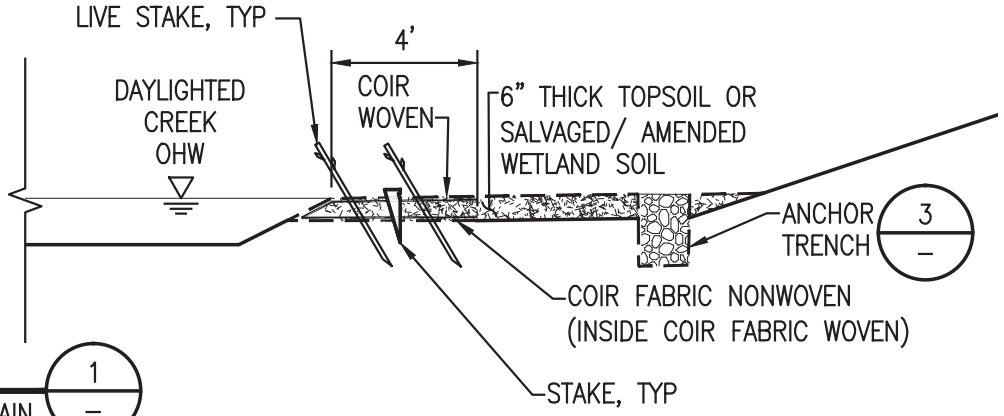

DETAIL 1 – COIR WRAP ON FLOODPLAIN

SCALE: 1/4"=1'–0"

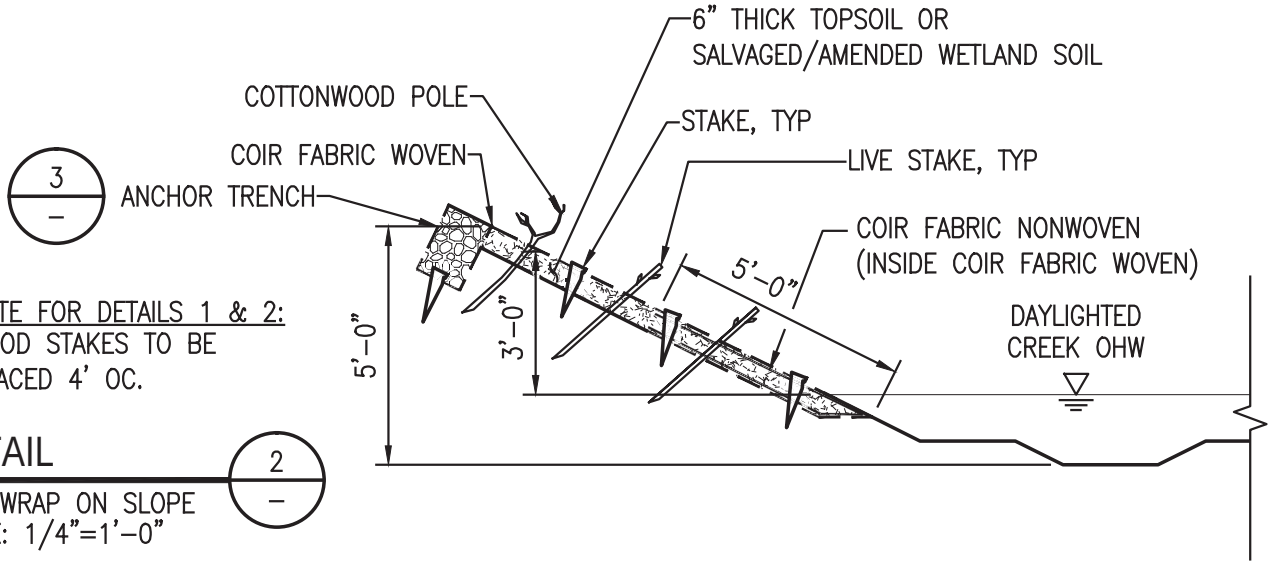

NOTE FOR DETAILS 1 & 2:
WOOD STAKES TO BE SPACED 4' OC.

DETAIL 2 – COIR WRAP ON SLOPE

SCALE: 1/4"=1'–0"

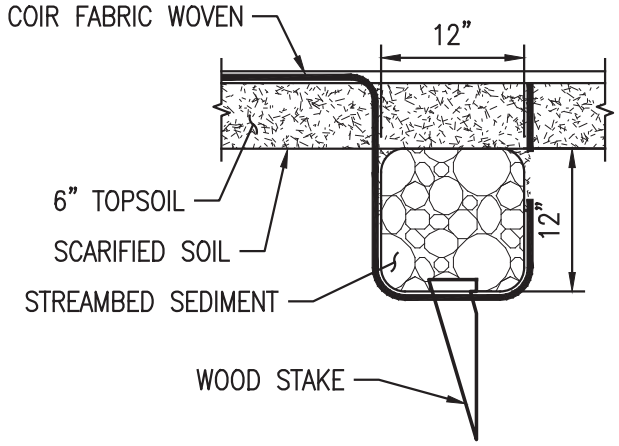

DETAIL 3 – ANCHOR TRENCH

SCALE: 3/4"=1'–0"

1/4"=1'–0" 0 1 2 4 Scale Feet

3/4"=1'–0" 0 1 2 Scale Feet

REFERENCE:

APPLICANT: CITY OF BELLINGHAM

LOCATION: VICINITY OF OLD FAIRHAVEN PARKWAY BETWEEN 17TH ST AND 22ND ST, BELLINGHAM, WA

COIR WRAP DETAILS

PROPOSED PROJECT:
PADDEN CREEK DAYLIGHTING PROJECT

DATE:

SHEET **29** OF 36

Featherstone, John L. – 10/18/2013 1:34:08 PM – \\corp.leidos.com\ESG\PRJ\EC\1798-SEA\001446 BELLINGHAM WA CITY OF\2651111030 Padden Creek Daylighting Project\Data Analytical\CADD\2a_JARPA\29-COIR WRAP DETAILS.dwg

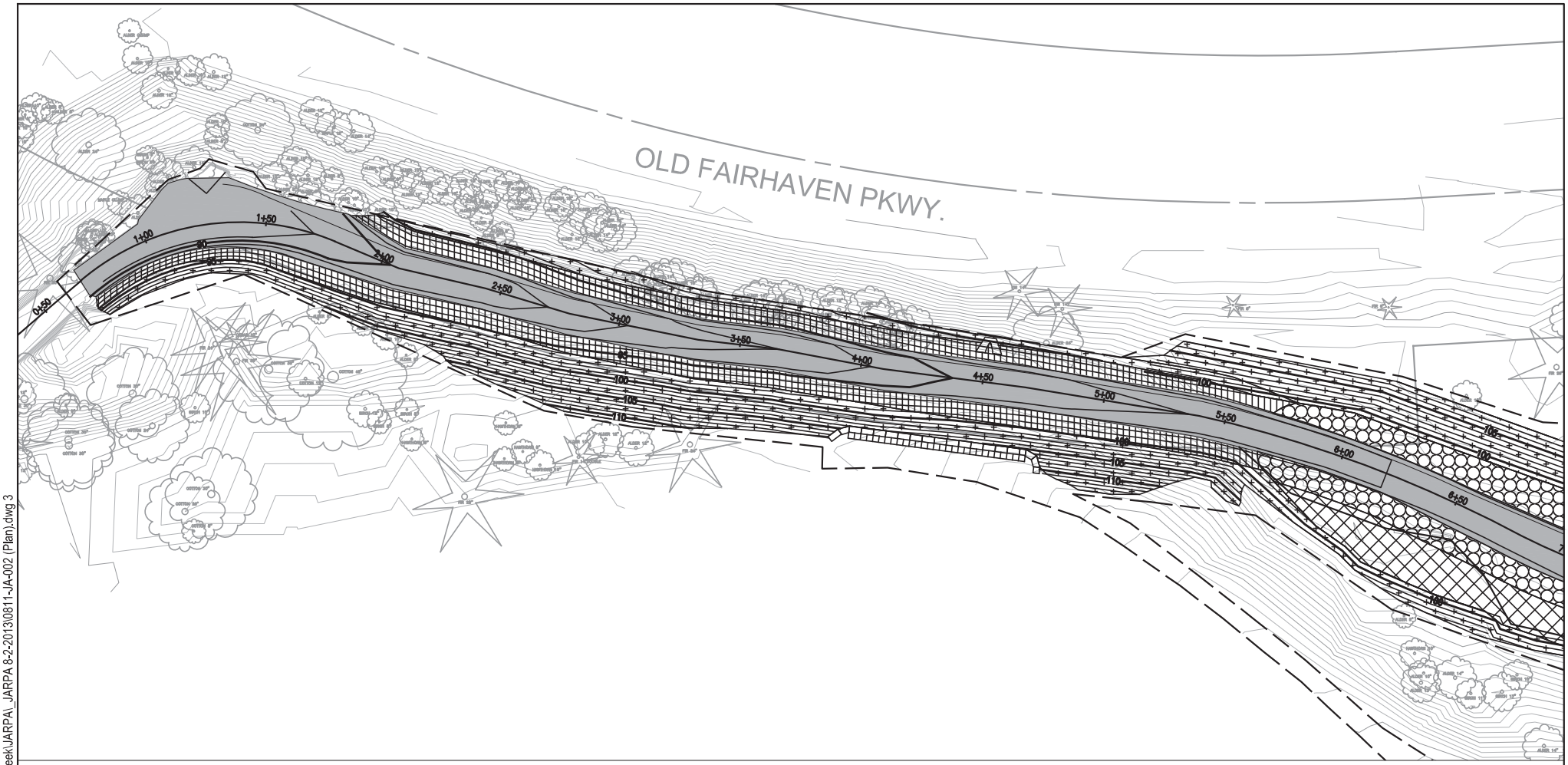

LEGEND:

- EMERGENT PLANT COMMUNITY
- LIVE STAKE WETLAND PLANT COMMUNITY
- SHRUB WETLAND PLANT COMMUNITY
- TREE AND SHRUB WETLAND PLANT COMMUNITY
- RIPARIAN BUFFER PLANT COMMUNITY – LIVE STAKES & POLES
- RIPARIAN BUFFER PLANT COMMUNITY
- RIPARIAN TRAILSIDE PLANT COMMUNITY
- DAYLIGHTED STREAM CHANNEL
- PROJECT LIMITS

0 60
Scale in Feet

NOTE: SEE PLANT SCHEDULE, JARPA SHEET 34, FOR PLANT CANDIDATE SPECIES BY PLANT COMMUNITY.

REFERENCE: APPLICANT: CITY OF BELLINGHAM	LOCATION: VICINITY OF OLD FAIRHAVEN PARKWAY BETWEEN 17TH ST AND 22ND ST, BELLINGHAM, WA	PROPOSED PROJECT: PADDEN CREEK DAYLIGHTING PROJECT	PROPOSED WETLAND AND RIPARIAN BUFFER RESTORATION (1 OF 4) DATE: AUGUST 2013 SHEET 30 OF 36

Aug 26, 2013 2:47pm aspooner K:\Projects\0811-SAIC\Padden Creek\JARPA_JARPA 8-2-2013\0811-JA-002 (Plan).dwg 3

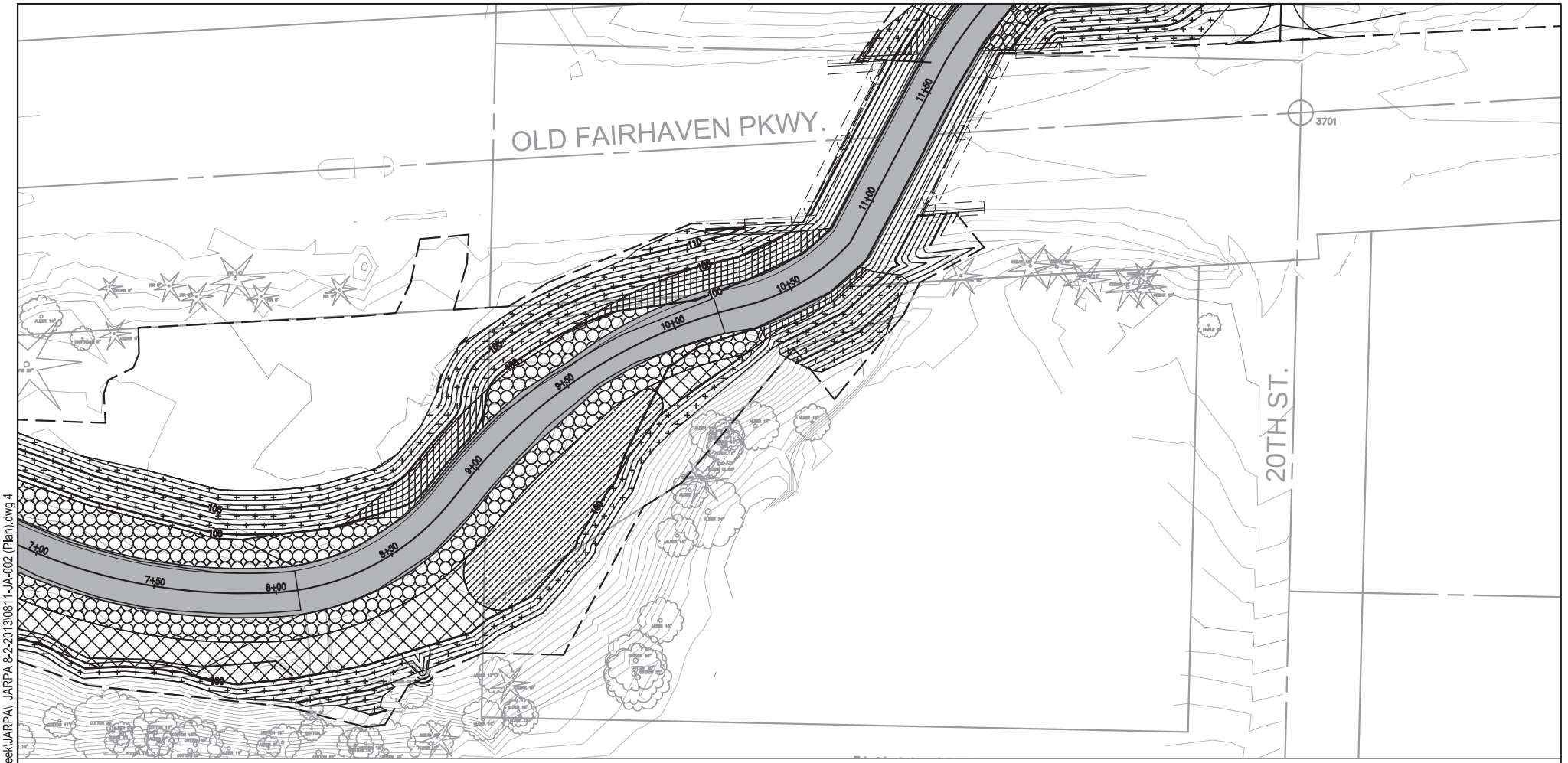

LEGEND:

- EMERGENT PLANT COMMUNITY
- LIVE STAKE WETLAND PLANT COMMUNITY
- SHRUB WETLAND PLANT COMMUNITY
- TREE AND SHRUB WETLAND PLANT COMMUNITY
- RIPARIAN BUFFER PLANT COMMUNITY – LIVE STAKES & POLES
- RIPARIAN BUFFER PLANT COMMUNITY
- RIPARIAN TRAILSIDE PLANT COMMUNITY
- DAYLIGHTED STREAM CHANNEL
- PROJECT LIMITS

0 60
Scale in Feet

NOTE: SEE PLANT SCHEDULE, JARPA SHEET 34, FOR PLANT CANDIDATE SPECIES BY PLANT COMMUNITY.

REFERENCE: APPLICANT: CITY OF BELLINGHAM	LOCATION: VICINITY OF OLD FAIRHAVEN PARKWAY BETWEEN 17TH ST AND 22ND ST, BELLINGHAM, WA	PROPOSED PROJECT: PADDEN CREEK DAYLIGHTING PROJECT	PROPOSED WETLAND AND RIPARIAN BUFFER RESTORATION (2 OF 4) DATE: AUGUST 2013 SHEET 31 OF 36

Aug 26, 2013 2:47pm aspooner K:\Projects\0811-SAIC\Padden Creek\JARPA_JARPA 8-2-2013\0811-JA-002 (Plan).dwg 4

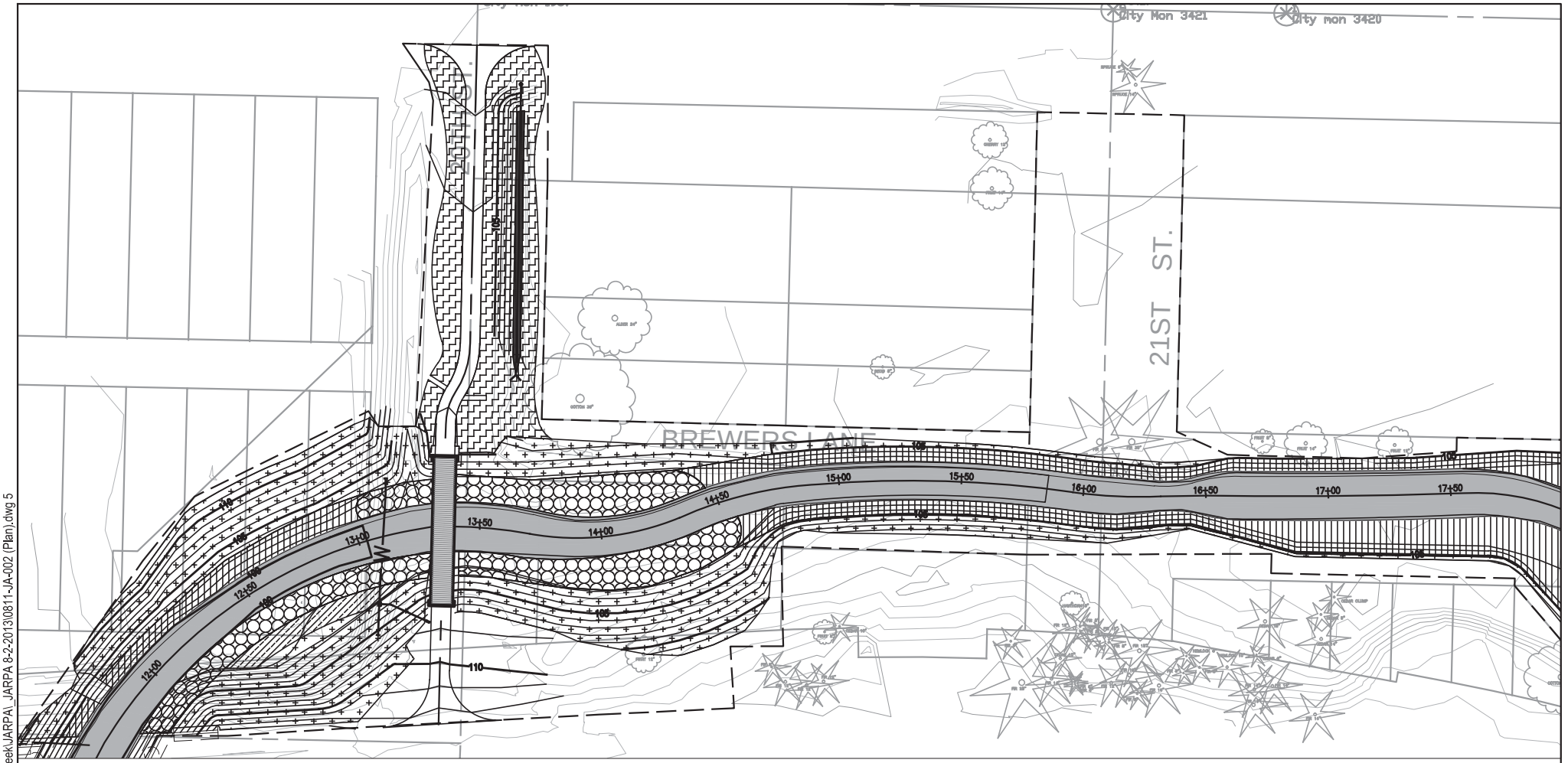

LEGEND:

- EMERGENT PLANT COMMUNITY
- LIVE STAKE WETLAND PLANT COMMUNITY
- SHRUB WETLAND PLANT COMMUNITY
- TREE AND SHRUB WETLAND PLANT COMMUNITY
- RIPARIAN BUFFER PLANT COMMUNITY – LIVE STAKES & POLES
- RIPARIAN BUFFER PLANT COMMUNITY
- RIPARIAN TRAILSIDE PLANT COMMUNITY
- DAYLIGHTED STREAM CHANNEL
- PROJECT LIMITS

0 60
Scale in Feet

NOTE: SEE PLANT SCHEDULE, JARPA SHEET 34, FOR PLANT CANDIDATE SPECIES BY PLANT COMMUNITY.

REFERENCE: APPLICANT: CITY OF BELLINGHAM	LOCATION: VICINITY OF OLD FAIRHAVEN PARKWAY BETWEEN 17TH ST AND 22ND ST, BELLINGHAM, WA	PROPOSED PROJECT: PADDEN CREEK DAYLIGHTING PROJECT	PROPOSED WETLAND AND RIPARIAN BUFFER RESTORATION (3 OF 4) DATE: AUGUST 2013 SHEET 32 OF 36

Aug 26, 2013 2:47pm aspooner K:\Projects\0811-SAIC\Padden Creek\JARPA_JARPA 8-2-2013\0811-JA-002 (Plan).dwg 5

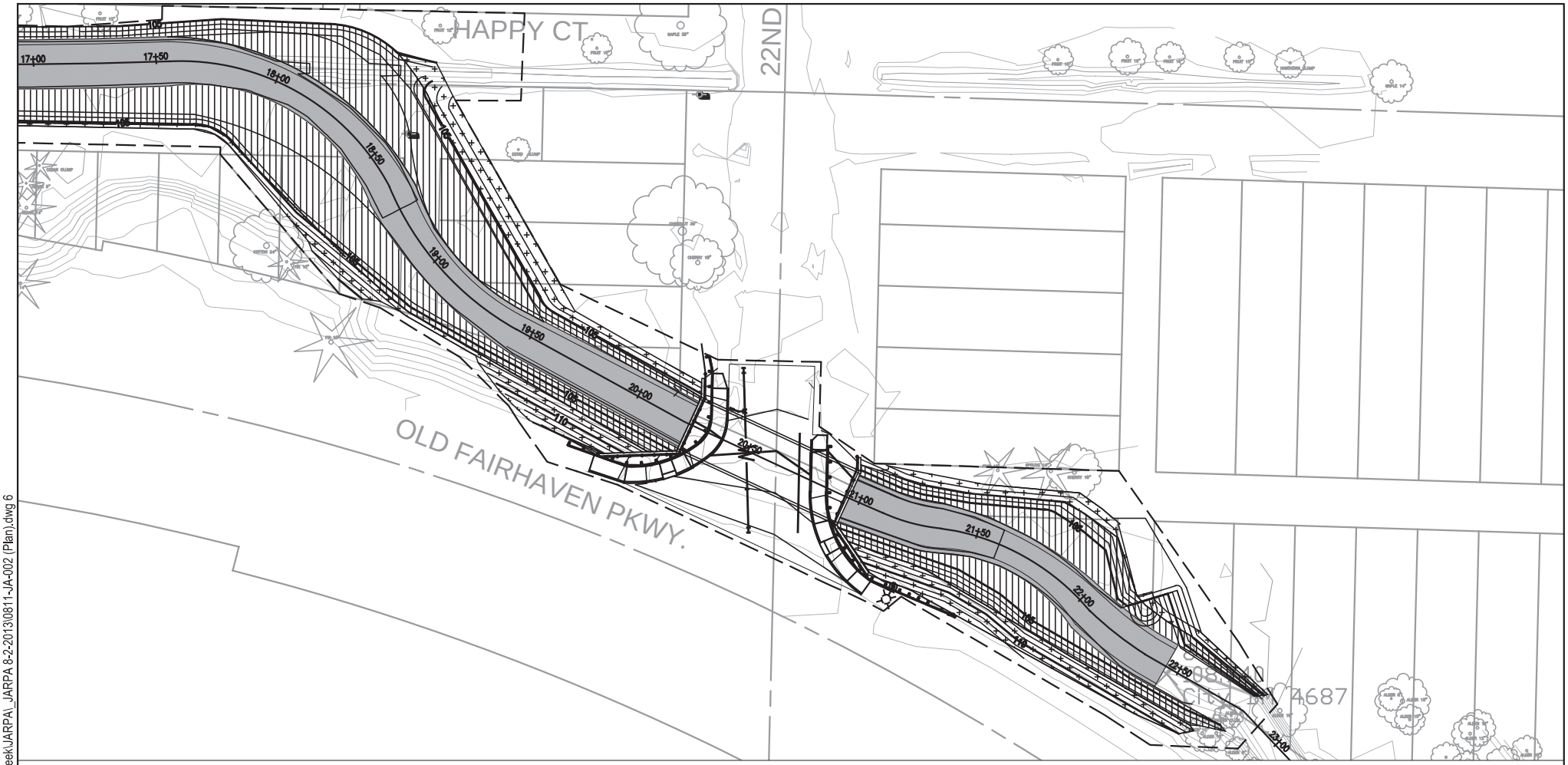

LEGEND:

- EMERGENT PLANT COMMUNITY
- LIVE STAKE WETLAND PLANT COMMUNITY
- SHRUB WETLAND PLANT COMMUNITY
- TREE AND SHRUB WETLAND PLANT COMMUNITY
- RIPARIAN BUFFER PLANT COMMUNITY – LIVE STAKES & POLES
- RIPARIAN BUFFER PLANT COMMUNITY
- RIPARIAN TRAILSIDE PLANT COMMUNITY
- DAYLIGHTED STREAM CHANNEL
- PROJECT LIMITS

0 60
Scale in Feet

NOTE: SEE PLANT SCHEDULE, JARPA SHEET 34, FOR PLANT CANDIDATE SPECIES BY PLANT COMMUNITY.

REFERENCE: APPLICANT: CITY OF BELLINGHAM	LOCATION: VICINITY OF OLD FAIRHAVEN PARKWAY BETWEEN 17TH ST AND 22ND ST, BELLINGHAM, WA	PROPOSED PROJECT: PADDEN CREEK DAYLIGHTING PROJECT	PROPOSED WETLAND AND RIPARIAN BUFFER RESTORATION (4 OF 4) DATE: AUGUST 2013 SHEET 33 OF 36

Aug 26, 2013 2:48pm aspooner K:\Projects\0811-SAIC\Padden Creek\JARPA_JARPA 8-2-2013\0811-JA-002 (Plan).dwg 6

Riparian Buffer Plant Community - Livestakes & Poles				
Common Name	**Botanical Name**	**Size**	**Spacing**	**Comments**
Carex obnupta	Slough sedge	10 cu-in plug	2' O.C.	
Carex stipata	Sawbeak sedge	10 cu-in plug	2' O.C.	
Juncus effusus	Soft rush	10 cu-in plug	2' O.C.	
Scirpus microcarpus	Small-fruited bulrush	10 cu-in plug	2' O.C.	

Live Stake Wetland Plant Community				
Common Name	**Botanical Name**	**Size**	**Spacing**	**Comments**
Salix scouleriana	Scouler's willow	LS	2' O.C.	
Salix hookeriana	Hooker's willow	LS	2' O.C.	
Cornus sericea	Redtwig dogwood	LS	2' O.C.	

Shrub Wetland Plant Community				
Common Name	**Botanical Name**	**Size**	**Spacing**	**Comments**
Shrubs and Groundcovers				
Althyrium fliix-femina	Lady fern	1 gallon	4' O.C.	
Lonicera involucrata	Black twinberry	1 gallon	4' O.C.	
Physocarpos capitatus	Pacific ninebark	1 gallon	4' O.C.	
Rosa pisocarpa	Wild clustered rose	1 gallon	4' O.C.	
Spiraea douglasii	Douglas spirea	1 gallon	4' O.C.	

Tree and Shrub Wetland Plant Community				
Common Name	**Botanical Name**	**Size**	**Spacing**	**Comments**
Trees				
Alnus rubra	Red alder	1 gallon	12' O.C.	
Crataegus douglasii	Black hawthorne	1 gallon	12' O.C.	
Malus fusca	Pacific crabapple	1 gallon	12' O.C.	
Picea sitchensis	Sitka spruce	1 gallon	12' O.C.	
Thuja plicata	Western red cedar	1 gallon	12' O.C.	Plant in areas with existing shade
Shrubs and Groundcovers				
Cornus sericea	Red twig dogwood	1 gallon	4' O.C.	
Rubus spectabilis	Salmonberry	1 gallon	4' O.C.	

Riparian Buffer Plant Community - Livestakes & Poles				
Common Name	**Botanical Name**	**Size**	**Spacing**	**Comments**
Populus trichocarpa	Black cottonwood	Pole	10' O.C.	Plant between 2' and 3' above OHWM
Salix scouleriana	Scouler's willow	LS	2' O.C.	Plant between 0' and 2' above OHWM
Salix hookeriana	Hooker's willow	LS	2' O.C.	Plant between 0' and 2' above OHWM

Riparian Buffer Plant Community - Trees & Shrubs				
Common Name	**Botanical Name**	**Size**	**Spacing**	**Comments**
Trees				
Abies grandis	Grand fir	2 gallon	12' O.C.	
Acer circinatum	Vine maple	2 gallon	12' O.C.	
Acer macropyllum	Big leaf maple	2 gallon	12' O.C.	
Prunus emarginata	Bitter cherry	2 gallon	12' O.C.	
Pseudotsuga menziesii	Douglas fir	2 gallon	12' O.C.	
Tsuga heterophylla	Western hemlock	2 gallon	12' O.C.	Plant in areas with existing shade
Shrubs and Groundcovers				
Corylus cornuta	Beaked hazelnut	1 gallon	4' O.C.	
Gaultheria shallon	Salal	1 gallon	4' O.C.	
Monhonia aquifolium	Oregon grape	1 gallon	4' O.C.	
Mahonia nervosa	Dwarf Oregon grape	1 gallon	4' O.C.	
Oemleria cerasiformis	Indian plum	1 gallon	4' O.C.	
Polystichum munitum	Swordfern	1 gallon	4' O.C.	
Rosa nutkana	Nootka rose	1 gallon	4' O.C.	
Sambucus racemosa	Red elderberry	1 gallon	4' O.C.	
Symphoricapos albus	Snowberry	1 gallon	4' O.C.	

Riparian Trailside Plant Community				
Common Name	**Botanical Name**	**Size**	**Spacing**	**Comments**
Shrubs and Groundcovers				
Acer circinatum	Vine maple	1 gallon	4' O.C.	
Gaultheria shallon	Salal	1 gallon	4' O.C.	
Philadelphus lewisii	Mock orange	1 gallon	4' O.C.	
Ribes sanguineum	Red-flowering currant	1 gallon	4' O.C.	
Symphoricapos albus	Snowberry	1 gallon	4' O.C.	

REFERENCE:

APPLICANT: CITY OF BELLINGHAM

LOCATION: VICINITY OF OLD FAIRHAVEN PARKWAY BETWEEN 17TH ST AND 22ND ST, BELLINGHAM, WA

PROPOSED PROJECT:

PADDEN CREEK DAYLIGHTING PROJECT

PLANTING SCHEDULE

DATE: AUGUST 2013

SHEET 34 OF 36

Aug 26, 2013 2:47pm aspooner K:\Projects\0811-SAIC\Padden Creek\JARPA_JARPA 8-2-2013\0811-JA-001 (Schedule).dwg 7

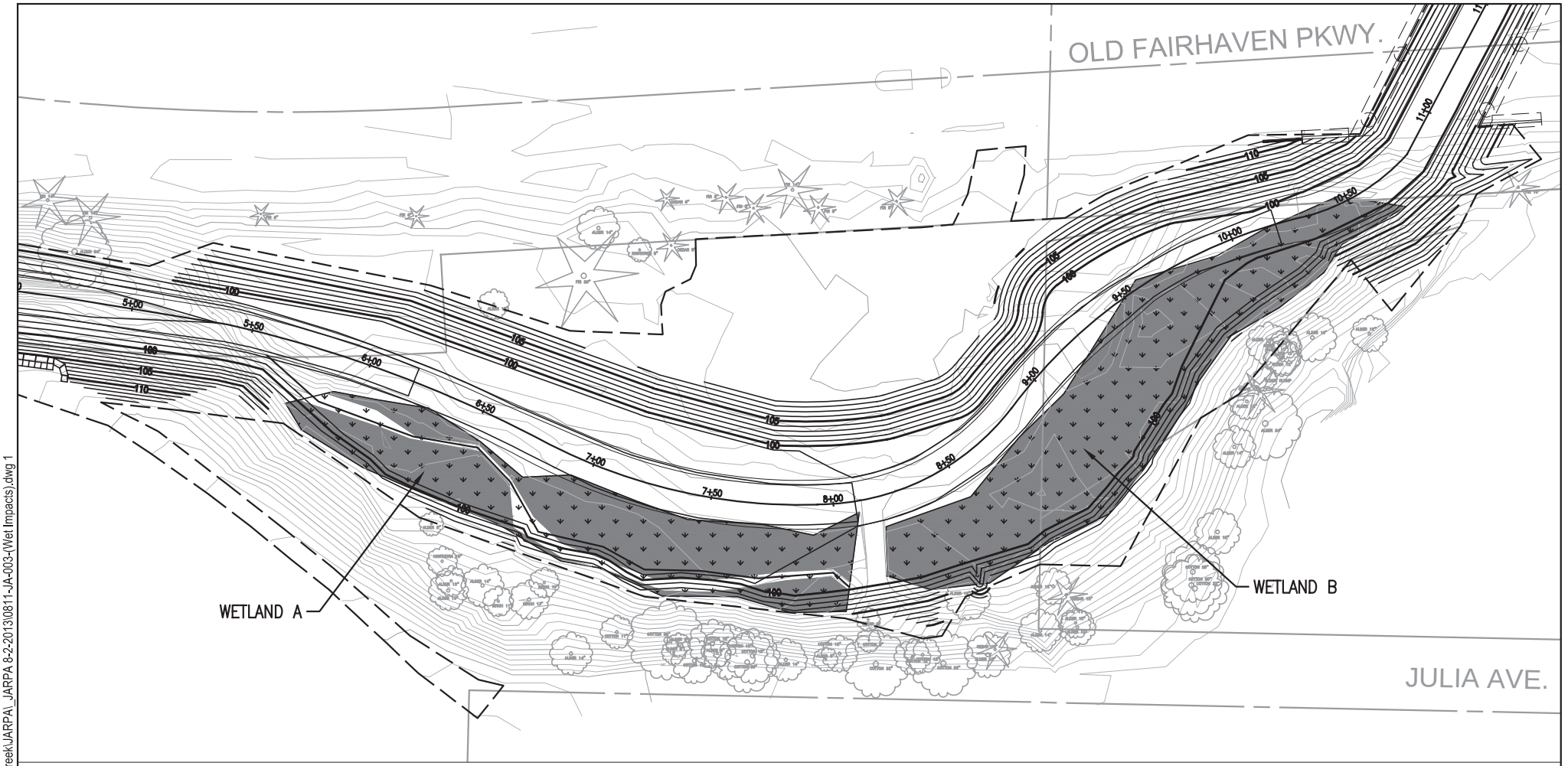

LEGEND:

EXISTING WETLAND

WETLAND IMPACTS

PROJECT LIMITS

0 60

Scale in Feet

REFERENCE: APPLICANT: CITY OF BELLINGHAM	LOCATION: VICINITY OF OLD FAIRHAVEN PARKWAY BETWEEN 17TH ST AND 22ND ST, BELLINGHAM, WA	PROPOSED PROJECT: PADDEN CREEK DAYLIGHTING PROJECT	WETLAND IMPACTS (1 OF 2) DATE: AUGUST 2013 SHEET 35 OF 36

Aug 26, 2013 2:48pm aspooner K:\Projects\0811-SAIC\Padden Creek\JARPA_JARPA 8-2-2013\0811-JA-003-(\Wet Impacts).dwg 1

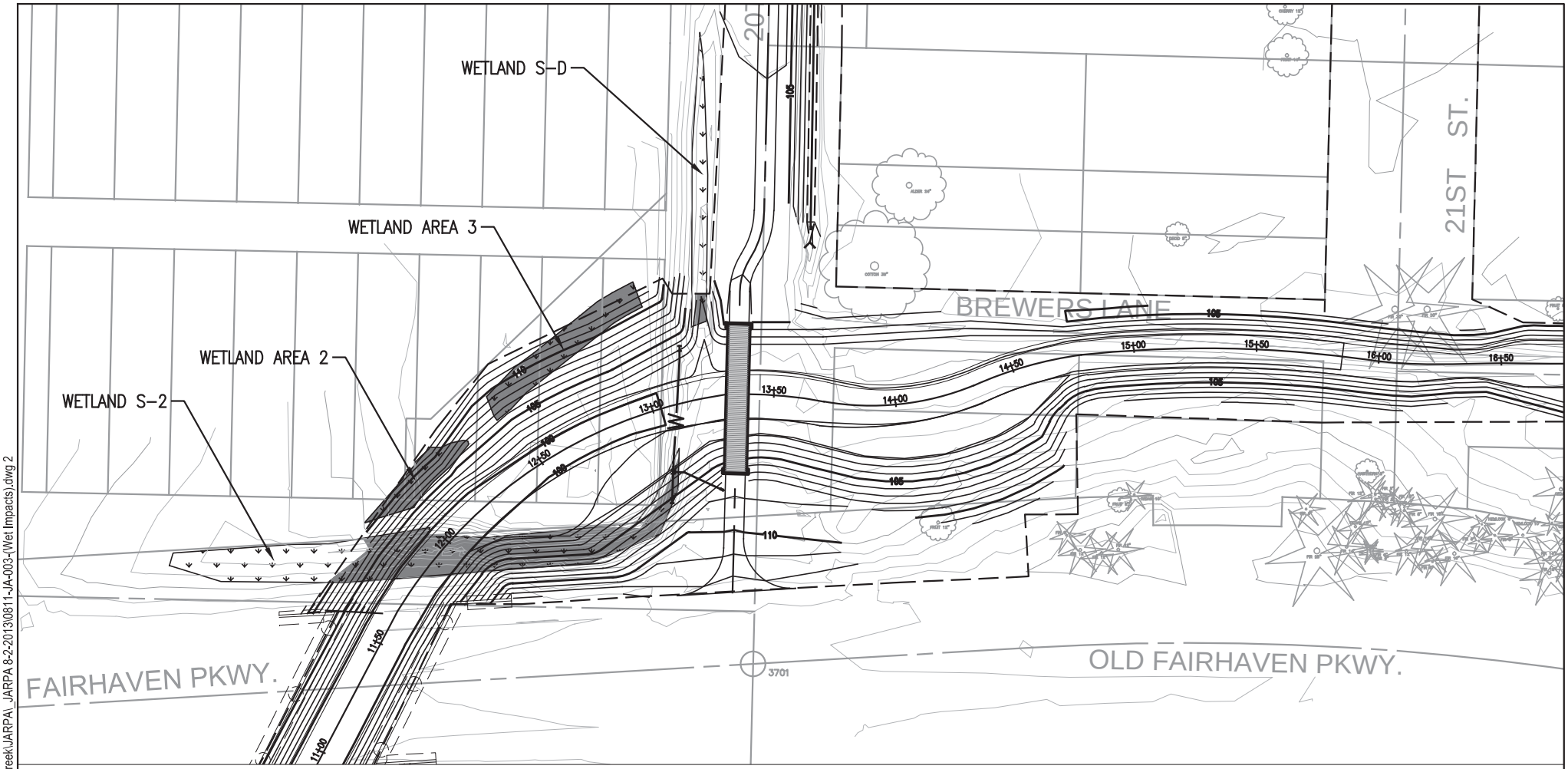

LEGEND:

- EXISTING WETLAND
- WETLAND IMPACTS
- PROJECT LIMITS

0 60

Scale in Feet

REFERENCE: APPLICANT: CITY OF BELLINGHAM	LOCATION: VICINITY OF OLD FAIRHAVEN PARKWAY BETWEEN 17TH ST AND 22ND ST, BELLINGHAM, WA	PROPOSED PROJECT: PADDEN CREEK DAYLIGHTING PROJECT	WETLAND IMPACTS (2 OF 2) DATE: AUGUST 2013 SHEET 36 OF 36

Aug 26, 2013 2:48pm aspooner K:\Projects\0811-SAIC\Padden Creek\JARPA_JARPA 8-2-2013\0811-JA-003-(Wet Impacts).dwg 2

SAIC

GeoEngineers

600 Dupont Street, Bellingham, Washington 98225, Telephone: 360.647.1510, Fax: 360.647.5044 www.geoengineers.com

Memorandum

To:	Mary Weber, PE of SAIC
From:	Aaron Hartvigsen, PE and J. Robert Gordon, PE
Date:	September 7, 2012
File:	0356-127-00, Task 0600
Subject:	Chemical Analytical Results Memorandum Padden Creek Daylighting Project Bellingham, Washington

The purpose of this memorandum is to briefly summarize observations and conclusions regarding evidence of petroleum encountered during our exploration program for the above referenced project. A summary of the geotechnical exploration program and the draft exploration logs were submitted separately in a memorandum dated September 6, 2012.

Soil with field screening evidence of petroleum hydrocarbon contamination (odor and staining) was encountered during the completion of a test pit TP-3 located at the northwest corner of Old Fairhaven Parkway and 22nd Street on August 3, 2012. GeoEngineers submitted one potentially contaminated soil sample (TP3S2D2-25) from a depth of approximately 2¼ feet below the ground surface (bgs) in test pit TP-3 for chemical analysis of petroleum hydrocarbons to characterize the soil for end use. The approximate location of test pit TP-3 is shown on the attached site plan. We did not observe field evidence of petroleum contamination in samples obtained from 1 foot bgs and 4 feet bgs in TP-3. We did not observe field evidence of contamination in other explorations during our exploration program.

The soil sample was obtained from a depth of approximately 2¼ feet bgs using a hand trowel. The sample was placed in a 4-ounce jar prepared by the laboratory and was submitted to OnSite Environmental in Redmond, Washington, for chemical analysis. The sample was kept cool during transport to the testing laboratory and chain-of-custody procedures were observed during transport of the sample to the testing laboratory. The soil sample was submitted for chemical analysis of petroleum hydrocarbons using Northwest Method NWTPH-HCID with follow-up testing of diesel- and lube oil-range petroleum hydrocarbons using Northwest Method NWTPH-Dx.

Lube oil- and gasoline-range petroleum hydrocarbons were not detected (less than 61 and 20 milligrams per kilogram [mg/kg], respectively) in sample TP3S2D2-25. Diesel-range petroleum hydrocarbons were detected at a concentration of 540mg/kg in the soil sample, which is less than the Model Toxics Control Act (MTCA) Method A Cleanup Level of 2,000 mg/kg. The source of the diesel contamination is unknown. The site is a former residential site, with some ground modification; therefore, it seems the most likely scenarios are contaminated soil brought to the site or a release from a heating oil underground storage tank (UST) located at the site.

Although the detected concentration is less than the MTCA Method A Cleanup Level and the presence of the soil contamination does not require regulatory notification or action, soil represented by sample TP3S2D2-25 exhibits a nuisance odor and, if transported from the Subject Property, should be transported to a permitted soil disposal facility, such as CEMEX in Everett, Washington.

Disclaimer: Any electronic form, facsimile or hard copy of the original document (email, text, table, and/or figure), if provided, and any attachments are only a copy of the original document. The original document is stored by GeoEngineers, Inc. and will serve as the official document of record.

Handling and disposal of the petroleum impacted soil could be managed during construction for this project. However, it is our experience that this process can severely impact cost and schedule of regular earthwork. We recommend that soil represented by TP3S2D2-25 be excavated prior to commencement of construction activities under a separate work order/contract and transported off-site for permitted disposal. Following excavation of the petroleum-impacted soil, we recommend that additional soil sample(s) be obtained from the limits of the excavation to confirm that soil with petroleum impacts represented by soil sample TP3S2D2-25 was successfully removed from the Subject Property.

We appreciate the opportunity to assist you with this project. Please call if you have any questions. This submittal is presented as part of our professional services under subconsultant agreement to SAIC and is based on very limited evaluation described above.

AJH:JRG:tln

Attachments:
Site Plan
Chemical Analytical Data

1 copy submitted electronically

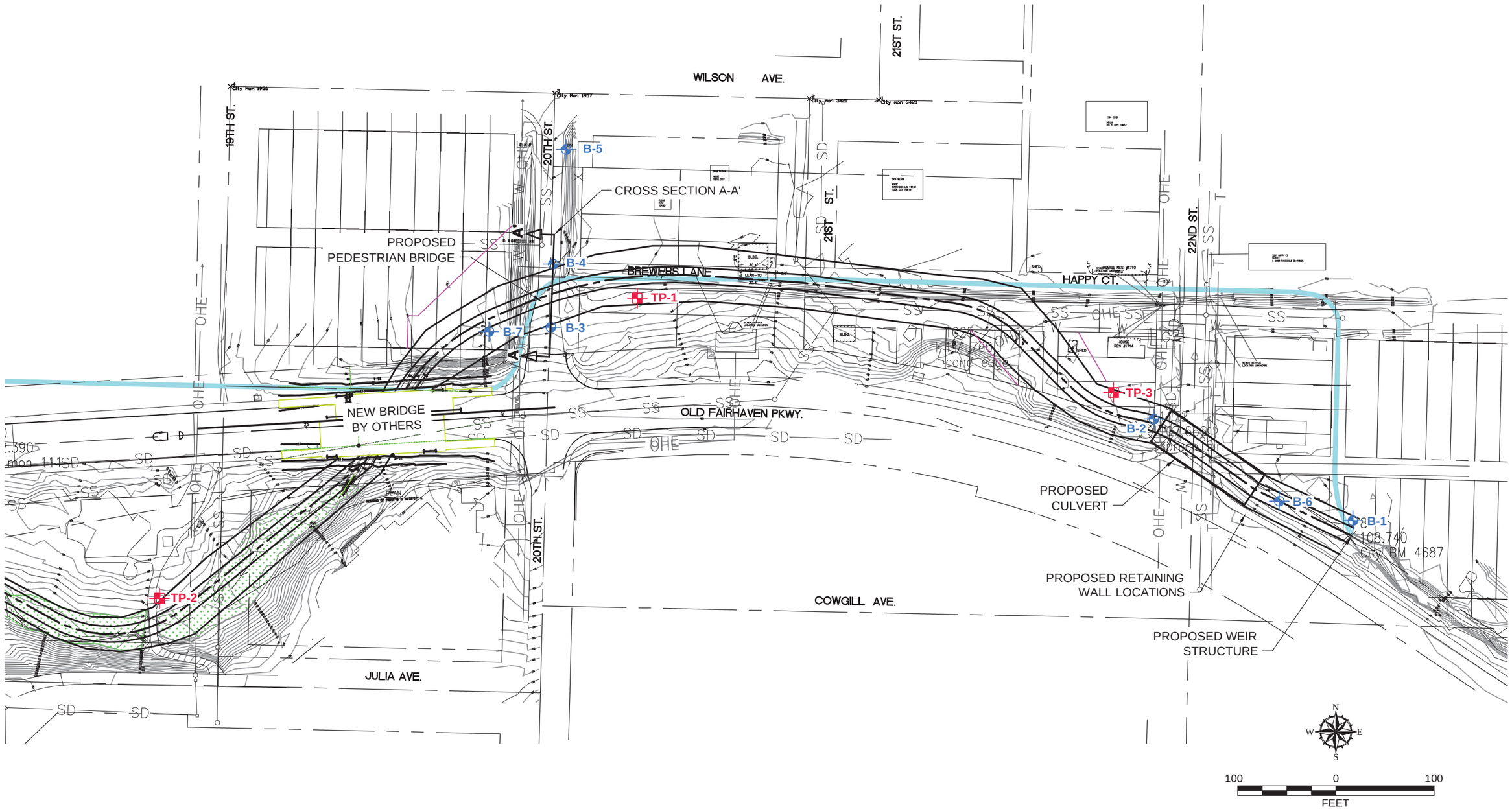

Notes

1. The locations of all features shown are approximate.
2. This drawing is for information purposes. It is intended to assist in showing features discussed in an attached document. GeoEngineers, Inc. can not guarantee the accuracy and content of electronic files. The master file is stored by GeoEngineers, Inc. and will serve as the official record of this communication.

Reference:

Legend

B-1	Boring by GeoEngineers
TP-1	Test Pit by GeoEngineers
	Proposed Channel Alignment
	Existing Creek Tunnel

Site and Exploration Plan

Padden Creek Daylight
Bellingham, Washington

GEOENGINEERS

Figure 2

XXX : XXX

\\BAM\Projects\0\0356127\CAD\035612700-F2-F3.dwg\TAB:Figure 2 modified on Aug 17, 2012 - 9:44am

OnSite Environmental Inc.

14648 NE 95th Street, Redmond, WA 98052 • (425) 883-3881

August 17, 2012

Aaron Hartvigsen
GeoEngineers, Inc.
600 Dupont Street
Bellingham, WA 98225

Re: Analytical Data for Project 0356-127-00
Laboratory Reference No. 1208-048

Dear Aaron:

Enclosed are the analytical results and associated quality control data for samples submitted on August 7, 2012.

The standard policy of OnSite Environmental, Inc. is to store your samples for 30 days from the date of receipt. If you require longer storage, please contact the laboratory.

We appreciate the opportunity to be of service to you on this project. If you have any questions concerning the data, or need additional information, please feel free to call me.

Sincerely,

David Baumeister
Project Manager

Enclosures

This report pertains to the samples analyzed in accordance with the chain of custody,
and is intended only for the use of the individual or company to whom it is addressed.

Date of Report: August 17, 2012
Samples Submitted: August 7, 2012
Laboratory Reference: 1208-048
Project: 0356-127-00

Case Narrative

Samples were collected on August 3, 2012 and received by the laboratory on August 7, 2012. They were maintained at the laboratory at a temperature of 2°C to 6°C.

General QA/QC issues associated with the analytical data enclosed in this laboratory report will be indicated with a reference to a comment or explanation on the Data Qualifier page. More complex and involved QA/QC issues will be discussed in detail below.

This report pertains to the samples analyzed in accordance with the chain of custody, and is intended only for the use of the individual or company to whom it is addressed.

Date of Report: August 17, 2012
Samples Submitted: August 7, 2012
Laboratory Reference: 1208-048
Project: 0356-127-00

ANALYTICAL REPORT FOR SAMPLES

Client ID	Laboratory ID	Matrix	Date Sampled	Date Received	Notes
TP3S2D2-25	08-048-01	Soil	8-3-12	8-7-12	

This report pertains to the samples analyzed in accordance with the chain of custody,
and is intended only for the use of the individual or company to whom it is addressed.

Date of Report: August 17, 2012
Samples Submitted: August 7, 2012
Laboratory Reference: 1208-048
Project: 0356-127-00

NWTPH-HCID
(with acid/silica gel clean-up)

Matrix: Soil
Units: mg/Kg (ppm)

Analyte	Result	PQL	Method	Date Prepared	Date Analyzed	Flags
Client ID:	**TP3S2D2-25**					
Laboratory ID:	08-048-01					
Gasoline Range Organics	**ND**	24	NWTPH-HCID	8-9-12	8-9-12	
Diesel Range Organics	**Detected**	61	NWTPH-HCID	8-9-12	8-9-12	
Lube Oil Range Organics	**ND**	120	NWTPH-HCID	8-9-12	8-9-12	
Surrogate:	*Percent Recovery*	*Control Limits*				
o-Terphenyl	*146*	*50-150*				

This report pertains to the samples analyzed in accordance with the chain of custody,
and is intended only for the use of the individual or company to whom it is addressed.

Date of Report: August 17, 2012
Samples Submitted: August 7, 2012
Laboratory Reference: 1208-048
Project: 0356-127-00

NWTPH-HCID
QUALITY CONTROL
(with acid/silica gel clean-up)

Matrix: Soil
Units: mg/Kg (ppm)

Analyte	Result	PQL	Method	Date Prepared	Date Analyzed	Flags
METHOD BLANK						
Laboratory ID:	MB0809S2					
Gasoline Range Organics	**ND**	20	NWTPH-HCID	8-9-12	8-9-12	
Diesel Range Organics	**ND**	50	NWTPH-HCID	8-9-12	8-9-12	
Lube Oil Range Organics	**ND**	100	NWTPH-HCID	8-9-12	8-9-12	
Surrogate:	*Percent Recovery*	*Control Limits*				
o-Terphenyl	*129*	*50-150*				

This report pertains to the samples analyzed in accordance with the chain of custody,
and is intended only for the use of the individual or company to whom it is addressed.

Date of Report: August 17, 2012
Samples Submitted: August 7, 2012
Laboratory Reference: 1208-048
Project: 0356-127-00

NWTPH-Dx
(with acid/silica gel clean-up)

Matrix: Soil
Units: mg/Kg (ppm)

Analyte	Result	PQL	Method	Date Prepared	Date Analyzed	Flags
Client ID:	**TP3S2D2-25**					
Laboratory ID:	08-048-01					
Diesel Range Organics	**540**	31	NWTPH-Dx	8-14-12	8-14-12	
Lube Oil Range Organics	**ND**	61	NWTPH-Dx	8-14-12	8-14-12	
Surrogate:	*Percent Recovery*	*Control Limits*				
o-Terphenyl	*111*	*50-150*				

This report pertains to the samples analyzed in accordance with the chain of custody,
and is intended only for the use of the individual or company to whom it is addressed.

Date of Report: August 17, 2012
Samples Submitted: August 7, 2012
Laboratory Reference: 1208-048
Project: 0356-127-00

NWTPH-Dx
QUALITY CONTROL
(with acid/silica gel clean-up)

Matrix: Soil
Units: mg/Kg (ppm)

Analyte	Result	PQL	Method	Date Prepared	Date Analyzed	Flags
METHOD BLANK						
Laboratory ID:	MB0814S1					
Diesel Range Organics	**ND**	25	NWTPH-Dx	8-14-12	8-14-12	
Lube Oil Range Organics	**ND**	50	NWTPH-Dx	8-14-12	8-14-12	
Surrogate:	*Percent Recovery*	*Control Limits*				
o-Terphenyl	*109*	*50-150*				

Analyte	Result		Percent Recovery		Recovery Limits	RPD	RPD Limit	Flags
DUPLICATE								
Laboratory ID:	08-055-02							
	ORIG	DUP						
Diesel Range Organics	**ND**	**ND**				NA	NA	U1
Lube Oil	**563**	**464**				19	NA	
Surrogate:								
o-Terphenyl			*113*	*99*	*50-150*			

This report pertains to the samples analyzed in accordance with the chain of custody,
and is intended only for the use of the individual or company to whom it is addressed.

Date of Report: August 17, 2012
Samples Submitted: August 7, 2012
Laboratory Reference: 1208-048
Project: 0356-127-00

% MOISTURE

Date Analyzed: 8-9-12

Client ID	Lab ID	% Moisture
TP3S2D2-25	08-048-01	18

This report pertains to the samples analyzed in accordance with the chain of custody,
and is intended only for the use of the individual or company to whom it is addressed.

OnSite Environmental Inc.

Data Qualifiers and Abbreviations

A - Due to a high sample concentration, the amount spiked is insufficient for meaningful MS/MSD recovery data.

B - The analyte indicated was also found in the blank sample.

C - The duplicate RPD is outside control limits due to high result variability when analyte concentrations are within five times the quantitation limit.

E - The value reported exceeds the quantitation range and is an estimate.

F - Surrogate recovery data is not available due to the high concentration of coeluting target compounds.

H - The analyte indicated is a common laboratory solvent and may have been introduced during sample preparation, and be impacting the sample result.

I - Compound recovery is outside of the control limits.

J - The value reported was below the practical quantitation limit. The value is an estimate.

K - Sample duplicate RPD is outside control limits due to sample inhomogeneity. The sample was re-extracted and re-analyzed with similar results.

L - The RPD is outside of the control limits.

M - Hydrocarbons in the gasoline range are impacting the diesel range result.

M1 - Hydrocarbons in the gasoline range (toluene-napthalene) are present in the sample.

N - Hydrocarbons in the lube oil range are impacting the diesel range result.

N1 - Hydrocarbons in diesel range are impacting lube oil range results.

O - Hydrocarbons indicative of heavier fuels are present in the sample and are impacting the gasoline result.

P - The RPD of the detected concentrations between the two columns is greater than 40.

Q - Surrogate recovery is outside of the control limits.

S - Surrogate recovery data is not available due to the necessary dilution of the sample.

T - The sample chromatogram is not similar to a typical _____.

U - The analyte was analyzed for, but was not detected above the reported sample quantitation limit.

U1 - The practical quantitation limit is elevated due to interferences present in the sample.

V - Matrix Spike/Matrix Spike Duplicate recoveries are outside control limits due to matrix effects.

W - Matrix Spike/Matrix Spike Duplicate RPD are outside control limits due to matrix effects.

X - Sample extract treated with a mercury cleanup procedure.

Y - Sample extract treated with an acid/silica gel cleanup procedure.

Z -

ND - Not Detected at PQL
PQL - Practical Quantitation Limit
RPD - Relative Percent Difference

This report pertains to the samples analyzed in accordance with the chain of custody, and is intended only for the use of the individual or company to whom it is addressed.

Chain of Custody

Page 1 of 1

OnSite Environmental Inc.
Analytical Laboratory Testing Services
14648 NE 95th Street • Redmond, WA 98052
Phone: (425) 883-3881 • www.onsite-env.com

Company: GeoEngineers
Project Number: 0356-127-00
Project Name: Padden Creek
Project Manager: Aaron Hartvigsen
Sampled by: AJH

Turnaround Request (in working days)

(Check One)

☐ Same Day ☐ 1 Day
☐ 2 Days ☐ 3 Days
☒ Standard (7 Days) (TPH analysis 5 Days)
☐ _____ (other)

Laboratory Number: 08-048

Lab ID	Sample Identification	Date Sampled	Time Sampled	Matrix	No. of Cont.	NWTPH-HCID	NWTPH-Gx/BTEX	NWTPH-Gx	NWTPH-Dx	Volatiles 8260B	Halogenated Volatiles 8260B	Semivolatiles 8270D/SIM (with low-level PAHs)	PAHs 8270D/SIM (low-level)	PCBs 8082	Organochlorine Pesticides 8081A	Organophosphorus Pesticides 8270D/SIM	Chlorinated Acid Herbicides 8151A	Total RCRA Metals	Total MTCA Metals	TCLP Metals	HEM (oil and grease) 1664	% Moisture
1	TP352D2-25	8/3	12:30	Soil	3	X			(X)													X

	Signature	Company	Date	Time
Relinquished		GeoEngineers	8/6/12	2:00 pm
Received		OSE	8/7/12	0945
Relinquished				
Received				
Relinquished				
Received				
Reviewed/Date		Reviewed/Date		

Comments/Special Instructions

- We will order additional tests based on initial results

Return cooler to Bellingham Office

(X) Added 8/10/12 RLG STA

Chromatograms with final report ☐

Data Package: Level III ☐ Level IV ☐ Electronic Data Deliverables (EDDs) ☐ _____

Attachment E

CULTURAL RESOURCE ASSESSMENT OF THE PROPOSED PADDEN CREEK DAYLIGHTED CHANNEL PROJECT, BELLINGHAM, WHATCOM COUNTY, WASHINGTON

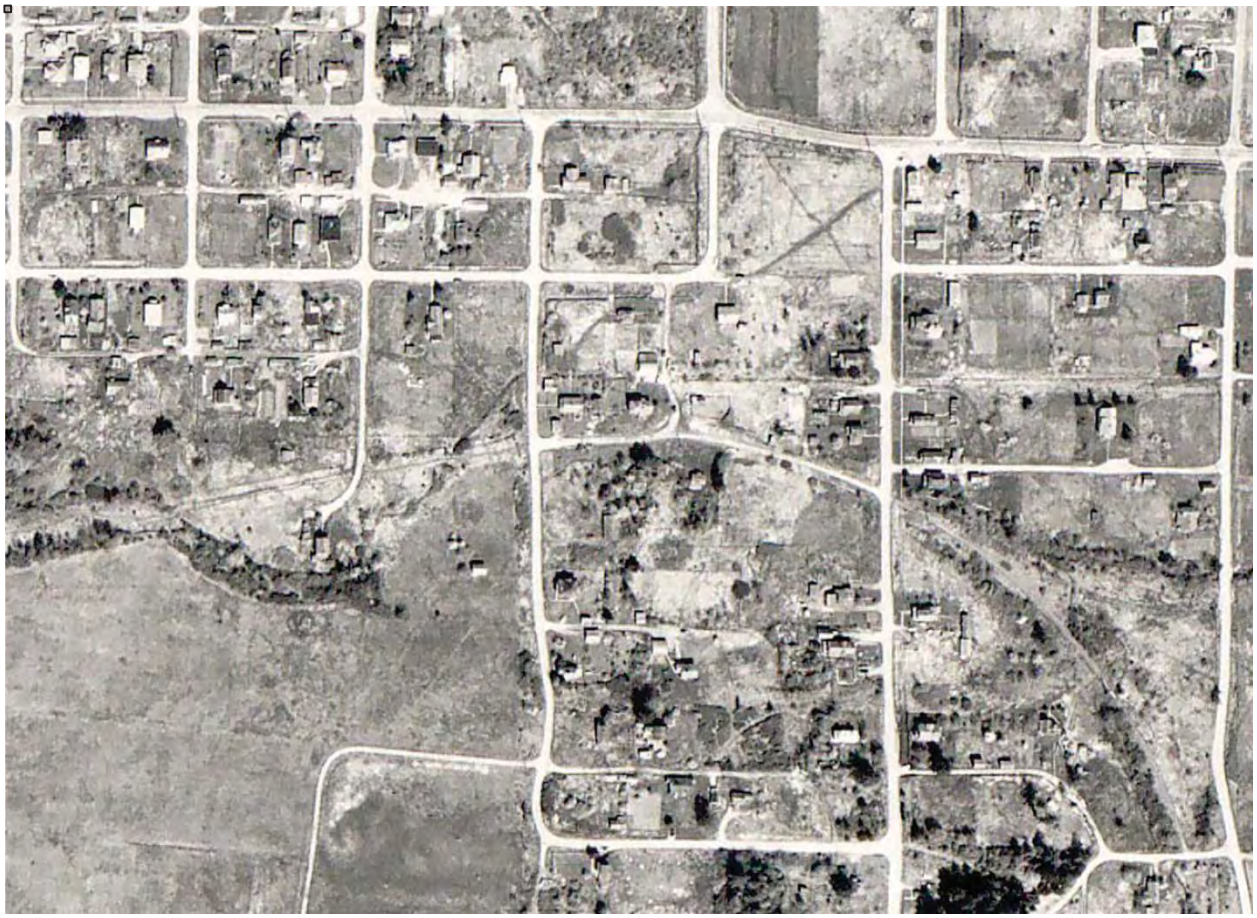

BY GARTH L. BALDWIN, M.A., RPA AND BRETT N. MEIDINGER, M.A.

PREPARED FOR:
MARY WEBER
SAIC
1001 4TH AVENUE SUITE 2500
SEATTLE, WA 98154

DAR TECHNICAL REPORT: 0712A
JANUARY 7, 2012

Table of Contents

Summary 5
Regulatory Context 6
Project Location and Area of Potential Effect (APE) 7
Environmental Context 10
Geomorphological Context 13
Cultural Context 14
Previous Archaeology 18
Expectations 22
Field Investigations 23
Methodology 23
Results 27
Historic Property (Happy Valley Tunnel System) 31
Archaeological Site 0712B-Temp 1 (Historic Road) 35
Archaeological Site 0712B-Temp 2 (Historic Railroad Property) 36
Recommendations 38
Post Review Discovery (inadvertent discoveries) 39
Works Cited 43
Appendix A: Geotest and Shovel Probe Data 51
Appendix B: Historic Property Inventory Form for the Happy Valley Tunnel System 60
Appendix C: Archaeological Site Inventory Form 0712A-Temp1 (Historic Road). 61
Appendix D: Archaeological Site Inventory Form 0712A-Temp2 (Historic Railroad Property). 62
CULTURAL RESOURCES REPORT COVER SHEET 63

TABLE OF FIGURES AND TABLES

Figure 1. The APE for the Padden Creek Daylighted Channel Project as illustrated on the 7.5 min USGS (1989) Bellingham South quadrangle map. 8

Figure 2. Preliminary site plan for the Padden Creek Daylighted Channel project (*Courtesy of* GeoEngineers, Inc. and modified by DAR). 9

Figure 3. Overview of "Wetland B" located in the western half of the APE, view west. 11

Figure 4. Overview of APE at 20th Street, showing overgrown vegetation within disturbed residential lots, view northeast. 12

Figure 5. Overview of APE at 22nd Street, view southeast. Note cars in photo are on Old Fairhaven Parkway (SR 11). 12

Figure 6. 1890 Plat map showing the APE in relation to the F & S Railroad line and Padden Creek (Hinks 1890). 16

Figure 7. 1891 map of Fairhaven illustrating the APE in relation to the railroad grade, commercial businesses and Padden Creek (Fairhaven Land Co. 1891). 18

Table 1. Archaeological sites previously recorded within a one mile radius of the APE. 20

Figure 8. Auger excavating geotest borings along the eastern APE. 23

Figure 9. Geotest boring (B2) sample showing the upper sediments. 24

Figure 10. Backhoe excavating geotest trenches along the APE within the park. 25

Figure 11. Location of shovel probes and geotest probes and trenches excavated throughout the APE for the Padden Creek Daylighted Channel project (*Courtesy of* GeoEngineers, Inc. and modified by DAR)... 26

Figure 12. Geotest trench T2 (formerly T5) showing typical soils near wetland B. 27

Figure 13. Shovel Probe 17 showing mottled fill deposits on top of a buried topsoil overlying graded glacial subsoils. 28

Figure 14. Location of sites identified and recorded within the APE. 30

Figure 15. The upstream headwall, view southwest. Note the retaining wall reinforcement along the south wing wall. 32

Figure 16. The north side of the upstream retaining wall, view northeast. 33

Figure 17. View of the interior of the tunnel (courtesy of Rick Lippold). 33

Figure 18. The culvert headwall, view southeast. 34

Figure 19. The downstream headwall, view northeast (courtesy of Aaron Hartvigsen, GeoEngineers Inc.). Note the retaining wall reinforcement along the southeast wing wall. 34

Figure 20. The downstream retaining wall along the creek channel banks and bed floor, view west. 35

Figure 21. The F & S Railroad grade intersecting Padden Creek, view southwest. Note the channel retaining wall. 37

Figure 22. The F & S Railroad grade, view northeast. 37

Cultural Resource Assessment of the Proposed Padden Creek Daylighted Channel Project, Bellingham, Whatcom County, Washington

Author: Garth L. Baldwin and Brett N. Meidinger
Date: January 7, 2012
Location: Whatcom County, Washington
USGS Quad: Bellingham South, WA (1989)
Legals: Township 37N, Range 2E, Section 12
Tax Parcels: 37021253519, 370212346507, 370212505526, 370212503533, 370212492532, 370212467546, 370212458535, 370212416537, 370212393510 and 370212408511

Summary

Drayton Archaeological Research (DAR) was contracted by SAIC Energy, Environment & Infrastructure, LLC on behalf of the City of Bellingham (the City) to conduct a cultural resource assessment for the Padden Creek Daylighted Channel Project (the project) located in Bellingham, Whatcom County, Washington. The City is proposing to restore a portion of Padden Creek that is currently routed through a tunnel. The restoration, or daylighting, is an attempt to return the creek to its natural channel that should help to relieve flooding and improve water quality, fish passage, and habitat on Padden Creek. The project will impact delineated wetlands; therefore a Nationwide 404 permit must be issued by the United States Army Corps of Engineers (the Corps). As the lead agency, the Corps must comply with the regulations of Section 106 of the National Historic Preservation Act (NHPA), as amended, and the implementing regulations (36 CFR Part 800).

DAR's cultural resource assessment for the project included background research, fieldwork and preparation of this report. Background review determined the area of potential effects (APE) is located in an area of high probability for historic properties. Field investigation included pedestrian survey, monitoring of seven geotest borings and three backhoe trenches, and excavation of 32 shovel probes. One historic property (Happy Valley Tunnel System) and two archaeological sites (a historic road segment [Happy Court] and a segment of the former Fairhaven and Southern [F & S] Railroad grade) were identified within the APE. In accordance with reporting requirements upheld by the Washington State Department of Archaeology and Historic Preservation (DAHP), a Historic Property Inventory (HPI) was prepared for the Happy Valley Tunnel System, and two archaeological site inventories were prepared for the Happy Court road segment and the F & S Railroad grade segment. In accordance with Section 106, the identified historic properties were evaluated for listing in the National Register of Historic Places (NRHP). The Happy Valley Tunnel System is recommended eligible, while the Happy Court road segment and the F & S Railroad grade segment are not recommended eligible.

Based on the results of DAR's cultural resources assessment, there is one historic property located within the APE that appears eligible for inclusion in the NRHP: the Happy Valley Tunnel System. As much of the Happy Valley Tunnel System located within the APE will be avoided; and, any and all disturbance will be confined to a later addition (e.g. 60-inch diameter culvert added in 1949) that does not contribute to the property's greater significance, DAR recommends the Corps assert a determination of

no adverse affect to the State Historic Preservation Officer (SHPO), the Tribal Historic Preservation Officer (THPO) and any other consulting or affected parties for the proposed undertaking.

Regulatory Context

This cultural resource assessment was conducted, in part, to satisfy regulatory requirements for Section 106 of the National Historic Preservation Act (NHPA), as amended, the implementing regulations (36 CFR Part 800), and as a contribution to the mandates of the Corps for wetland impacts and mitigation. Under Section 106, all federal agencies involved in an undertaking with the potential to affect historic properties must consider the effects of those actions and consult with affected parties. A historic property is defined in 36 CFR part 800.16(l)(1), as follows:

> …any prehistoric or historic district, site, building, structure, or object included in, or eligible for inclusion in, the National Register of Historic Places maintained by the Secretary of the Interior. This term includes artifacts, records, and remains that are related to and located within such properties. The term includes properties of traditional religious and cultural importance to an Indian tribe or Native Hawaiian organization and that meet the National Register criteria.

A historic property is one that is minimally 50 years of age and that meets at least one of the criteria established by the NHPA for eligibility for listing in the NRHP and must be reviewed following Section 106 mandates. Impacts to a historic property, as defined in the act, must be avoided, minimized or mitigated. Properties that do not meet eligibility criterion (those which may be archaeological sites but are not historic properties according to the act) are not considered further by the lead federal agency and require no further management consideration. The criteria used to evaluate significant cultural properties are (36 CFR 60.4):

> The quality of significance in American history, architecture, archaeology, engineering and culture is present in districts, sites, buildings, structures, and objects that possess integrity of location, design, setting, materials, workmanship, feeling, and association, and:
>
> (a) That are associated with events that have made a significant contribution to the broad patterns of our history; or
> (b) That are associated with the lives of persons significant in our past; or
> (c) That embody the distinctive characteristics of a type, period, or method of construction, or that represent the work of a master, or that possess high artistic values, or that represent a significant and distinguishable entity whose components may lack individual distinction; or
> (d) That have yielded, or may be likely to yield, information important in prehistory or history.

If NRHP eligible historic properties are identified within the APE then potential adverse effects to the historic properties must be assessed, and a resolution of adverse effects recommended. Minimally, the agency must consult with, and seek comment from the State Historic Preservation Officer (SHPO) and/or the affected Tribal Historic Preservation Officer (THPO), as applicable, and consult with any affected or potentially affected Native American Tribe(s). The Corps is obligated to carry out a good faith effort to identify historic properties (36 CFR part 800.04). The pedestrian survey, subsurface testing, site recording, and background research was, in the opinion of DAR, a good faith effort to identify and record surface and/or buried historic properties within the APE.

The preceding assessment has been supervised by a professional archaeologist and meets or exceeds the criteria set forth in RCW 27.53 for professional archaeological reporting and assessment. In the event any items of cultural patrimony are encountered during project work, by law all work must cease. It is further recommended that the proponents become familiar with Washington State laws, particularly Revised Code of Washington (RCW) Chapter 27.53.060, RCW 27.44.040 and RCW 68.50.645.

Project Location and Area of Potential Effect (APE)

The project is located in the Happy Valley neighborhood of the Fairhaven district of Bellingham, Whatcom County, Washington in the N ½ of the NE ¼ of Section 12 in Township 37 North, Range 2 East, Willamette Meridian (Figure 1). The project area generally extends east to west for approximately 701 m (2,300 ft) between 22nd and 17th Streets and between Wilson Street and Happy Court on the north and Julia Avenue on the south and includes ten Whatcom County tax parcels: 37021253519, 370212346507, 370212505526, 370212503533, 370212492532, 370212467546, 370212458535, 370212416537, 370212393510 and 370212408511 . The APE has been defined as the project area, as described above.

The City is proposing to restore approximately 701 meters (m) or 2,300 feet (ft) of Padden Creek that is currently routed underground through the Happy Valley Tunnel System. The restoration, or daylighting, will return the creek its natural channel in an effort to help relieve flooding and improve water quality, fish passage, and habitat; the Happy Valley Tunnel System will largely be left in-place and avoided (Figure 2). To do this approximately 30 feet of a 60-inch diameter culvert located near the tunnel entrance will be removed to transition the existing creek into the newly daylighted creek. From here the daylighted creek will flow through a newly installed 4-sided box culvert at 22nd Street, a pedestrian bridge to be constructed across the channel at 20th Street; and, a Washington State Department of Transportation (WSDOT) bridge to be built on Old Fairhaven Parkway (SR 11). Additionally, new retaining walls, culverts, and rock ramps will be installed at the lower (west) 300 feet of the daylighted channel to dissipate energy as the creek descends.

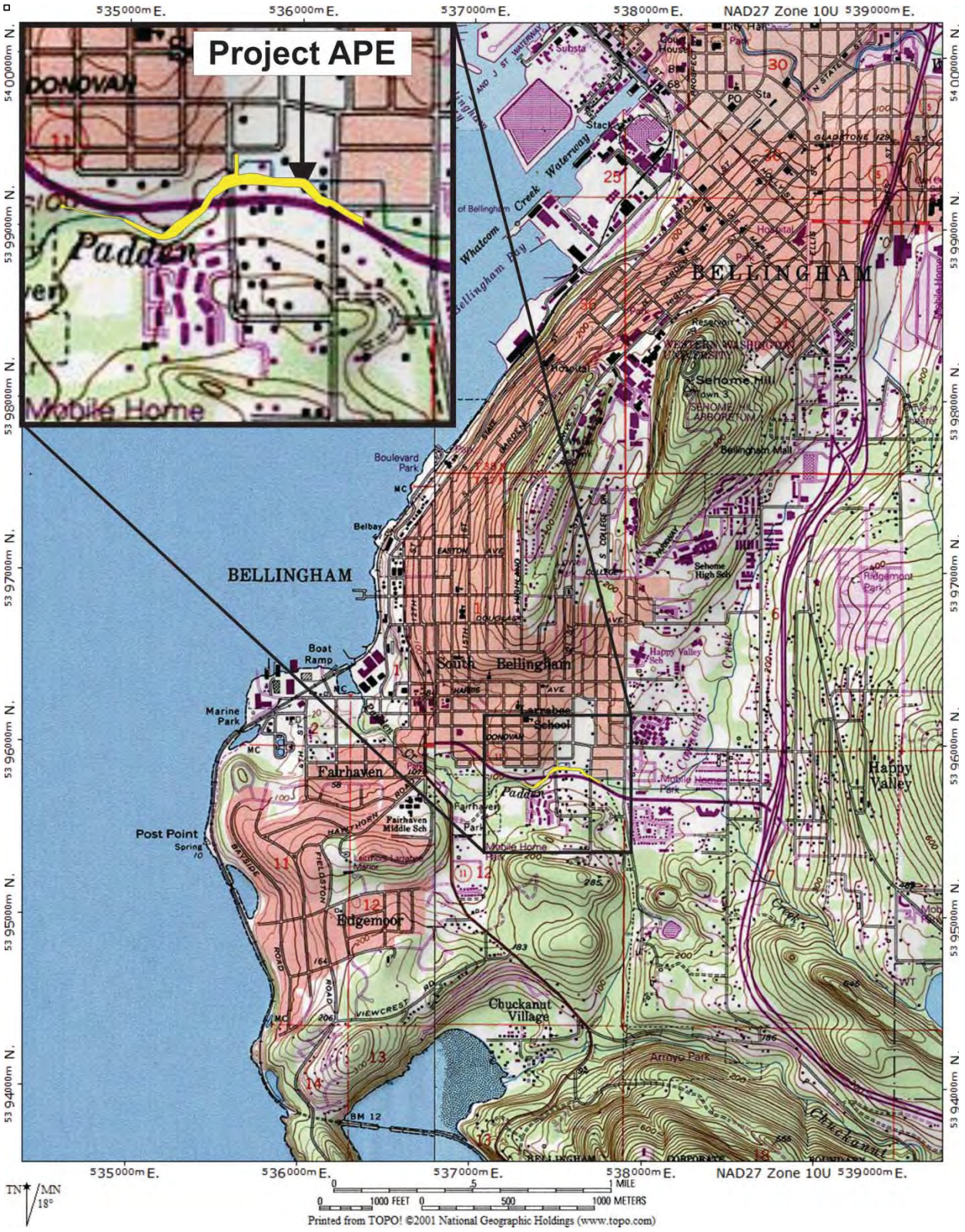

Figure 1. The APE for the Padden Creek Daylighted Channel Project as illustrated on the 7.5 min USGS (1989) Bellingham South quadrangle map.

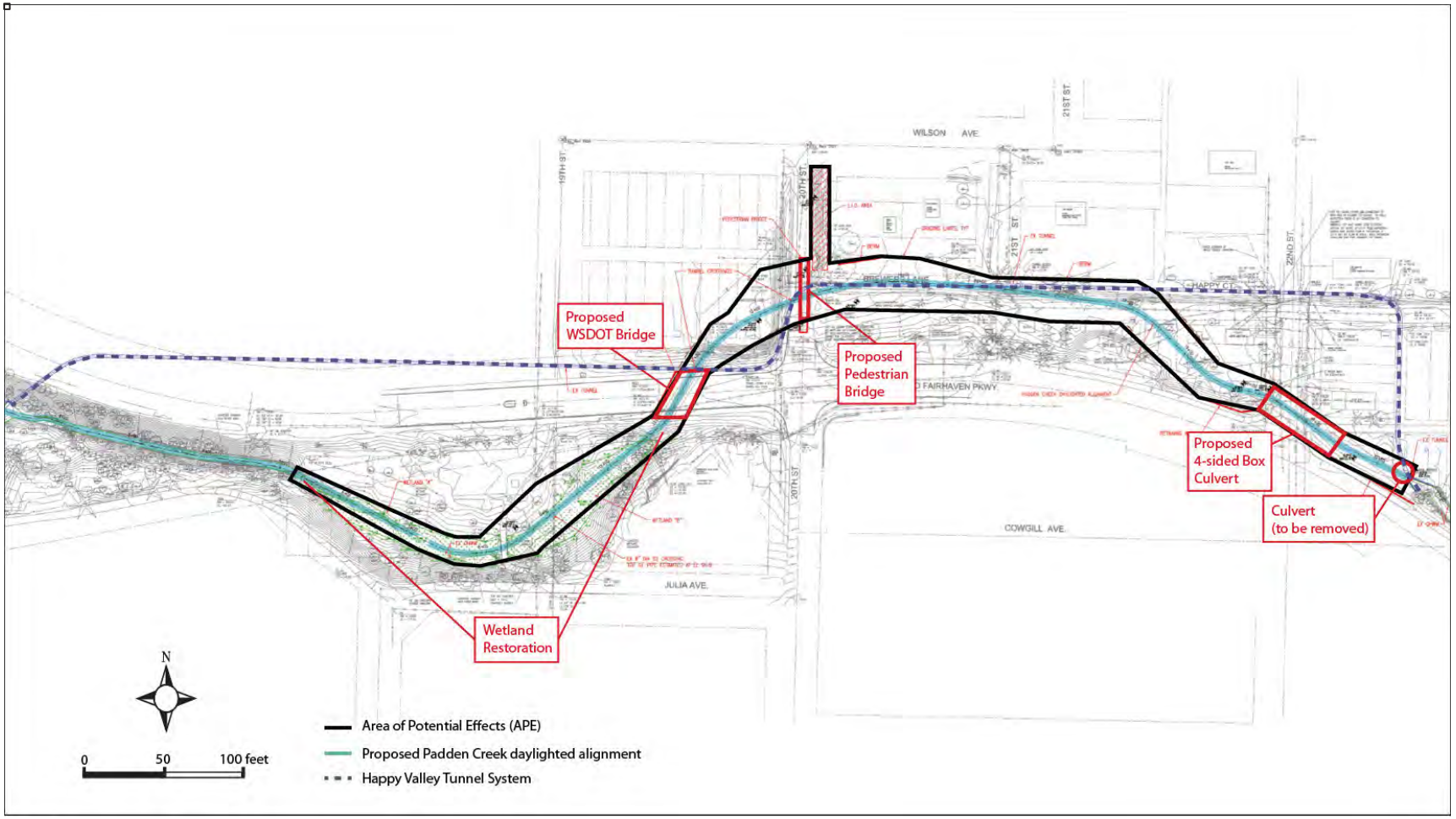

Figure 2. Preliminary site plan for the Padden Creek Daylighted Channel project (*Courtesy of* GeoEngineers, Inc. and modified by DAR).

Environmental Context

The APE is located 0.9 miles inland from Boundary Bay to the west and Chuckanut Bay to the south. The APE is situated on a gently northwest sloping terrace that has been heavily influence by Padden Creek alluvial deposits, ranging in elevation from 37 to 34 m (120 to 110 ft) above sea level. The surrounding landform is composed of a glacial drift surrounded by Eocene Age sedimentary rocks to the north on Sehome Hill, east on Lookout Mountain, and south on Chuckanut Mountain (Lasmanis 1991).

Padden Creek's watershed originates in the Chuckanut Mountains and according to the Whatcom Salmon Recovery (2003) it drains approximately 3,830 acres that include the sub-basins of Connelly Creek, Lake Padden and several unnamed tributaries. The creek continues to flow through Lake Padden for almost 3 miles to its mouth where it eventually empties into Boundary Bay. The original Padden creek channel, carved steeply sided channel walls along the western APE and created areas of delineated wetlands (A and B) within the southwestern APE.

Padden Creek has been intensively modified since the late 1880s. Historically, there was an embayment and estuary at the mouth of the creek (known as Fairhaven Bay) and it was bordered on by two small sand spits. The residents of Fairhaven began infilling and otherwise modifying Fairhaven Bay in preparation for the construction of the Railroad lines. By 1892, Padden Creek had been straightened, ditched and partially buried underground in the Happy Valley Tunnel System.

Prior to extensive modification, the entire Padden Creek watershed supported large runs of anadromous fish such as salmon (including Coho, Chinook, chum and steelhead), cutthroat trout and other fish. Currently, however, Padden Creek supports only small runs of salmon and cutthroat trout as the current culvert and tunnel system prevents the majority of fish from migrating further up the creek for spawning (City of Bellingham 2008).

Local vegetation would have been typical of the Puget Sound area *Tsuga hetrophylla* vegetation zone (Franklin and Dyrness 1973:44-5). This vegetation zone consists of an over story dominated by Western hemlock (*heterophylla*), Douglas fir (*Pseudotsuga menziesii*) and Western red cedar (*Thuja plicata*) and big leaf maple (*Acer macrophyllum*). Large areas would have differed from the broader regional pattern however, with areas of prairie, oak woodland, and pine forest being distributed throughout the southern Puget Sound basin (Franklin and Dyrness 1973:88). The vegetation in the local area surrounding the APE would have included, but not been limited to the previously mentioned trees in addition to vine maple (*Acer circinatum*) and salal (*Gaultheria shallon*). Other locally important and available vegetative species would have included bracken fern (*Pteridium aquilinum*), blackcap *(Rubus occidentalis*), currants (*Ribes spp.*), deer fern (*Blechnum spicant*), gooseberries (*Ribes spp.*), huckleberries (*Vaccinium* spp.), Indian plum (*Oemleriace),* oceanspray (*Holodiscus discolor*), Red elderberry (*Sambucus racemosa*), snowberry *(Symphoricarpos albus*), sword fern (*Polystichum munitum*) and trailing blackberry (*Rubus ursinus*) (Pojar and MacKinnin 1994).

Presently, vegetation within the APE is a mixture of riparian and wetland habitat, mixed forest and residential lawns (Figure 3 - Figure 5). The area within the Padden Creek channel consists of native riparian and wetland vegetation including red alder (*Alnus rubra*), birch (Betula sp.), willow (*Salix* sp.) mountain-ash (*Sorbus* sp.), black cottonwood (*Populus balsamifera* sp.), oak (Quercus sp.),hazelnut (*Corylus cornuta*), elderberry (*Sambucus* sp.) and Douglas fir (*Pseudotsuga menziesii*). The understory consists of wild rose (*Rosa* sp.), thistle (*Cirsium* sp.), grasses, horsetail (*Equisetum arvense*) vetch (*Vicia* sp.), wild carrot (*Conioselinum pacificum*) and springbank clover (*Trifolium dubium*). There are also a number of introduced plants within the APE including Himalayan blackberry (*Rubus discolor*), horsechestnut (*Aesculus* sp.), apple (*Malus* sp.), holly (*Ilex opaca*), ivy (*Hedera sp.*) and other garden ornamentals.

Figure 3. Overview of "Wetland B" located in the western half of the APE, view west.

Figure 4. Overview of APE at 20th Street, showing overgrown vegetation within disturbed residential lots, view northeast.

Figure 5. Overview of APE at 22nd Street, view southeast. Note cars in photo are on Old Fairhaven Parkway (SR 11).

Geomorphological Context

The project is located at the northern end of a geological and physiographic province designated as the Puget Lowland (PL). Starting in the early Pleistocene, the PL was subject to at least four periods of extensive glaciation, which scoured out the land as each glacier advanced and retreated (Easterbrook 2003; Lasmanis 1991). Sediments were deposited and often reworked as the glaciers advanced and retreated. A thick mantle of glacial drift and outwash deposits were left across much of Whatcom County at the end of the last of these glacial periods: the Fraser Glaciation (Easterbrook 2003). Some areas within Whatcom County also contain older bedrock outcrops dating to the Tertiary.

The Vashon Stade of the Fraser Glaciation began around 18,000 BP with an advance of the Cordilleran ice sheet into the lowlands (Porter and Swanson 1998). The Puget Lobe of the ice sheet flowed down into the PL and reached its terminus just south of Olympia between 14,500 and 14,000 BP (Clague and James 2002; Easterbrook 2003; Waitt and Thorson 1983). The Puget Lobe was thicker towards the north and thinned towards its terminus. The depth of the ice near Bellingham is estimated to have been about 1,800 m (5,904 ft) thick (Easterbrook 2003).

The PL began to retreat shortly after reaching its terminus. Marine waters entered the lowlands that had been carved out by the glacier and filled Puget Sound. The remaining ice was floated and wasted away rapidly. Everson glaciomarine drift deposits dating between 12,500 and 11,500 BP were released from the melting glacial ice and deposited on the sea floor across the northern and central Puget Lowland (Easterbrook 2003). The enormous weight of the ice had depressed the land but as the crust rebounded relative sea levels fell and exposed some of the drift deposits (Clague and James 2002; Easterbrook 2003). The Cordilleran ice sheet advanced once again during the Sumas Stade of the Fraser Glaciation from ca. 11,600 to 10,000 BP, leaving glacial till and outwash deposits in northwestern Washington (Kovanen and Easterbrook 2002).

Approximately 10,000 years ago, the Cordilleran ice sheet disappeared, bringing an end to the Ice Age in this region. As a result of the melted ice, all of the rocks, sand, dirt and debris that were being scoured out and carried by the glacier were deposited as “great lowland fill” (Booth and Goldstein 1994). Throughout the next 10,000 years rivers and streams altered the landscape by down-cutting through this glacial till and outwash. The thousands of Puget Lowland rivers and streams have carved out valleys, created deltas, filled in bays, buried low-lying shorelines thereby creating today’s modern landscape.

The geology within the APE consists of Tertiary sedimentary rocks (Lapen 2000). The bedrock is the Padden member of the Chuckanut Formation. The Padden Member consists of sandstone and conglomerate alternating with mudstone and minor amounts of coal that dates to the late Eocene (Lapen 2000). These sedimentary rocks formed in a broad river floodplain prior to the formation of the Cascade Mountains (Mustoe et al. 2007).

The APE is designated within the Whatcom Basin physiographic region, characterized by its low topography and three major geomorphic landforms including glaciomarine drift plains; glaciofluvial

terraces and drift-capped uplands along the Nooksack River floodplain (Goldin 1992: 3). These geomorphic surfaces convey important regional and temporal information through the presence of depositional and erosional events created by glacial and fluvial progression (Goldin 1992:272). The rolling topography of the basin reflects the deposition of sediments from melting ice and debris during late Pleistocene glaciation. Soils within the lower Padden Creek basin are glaciomarine deposits with an eolian mantle and volcanic ash and were deposited from 12,090 to 10,370 years BP (Goldin 1992:274; Lapen 2000).

According to United States Department of Agriculture, Natural Resource Conservation District (USDA-NRCS) the majority of the soils within the APE have been mapped as Urban land-Whatcom-Labounty complex with only a small portion of Everett-Urban land complex within the designated wetlands the south western APE (USDA-NRCS 2006). Urban lands are covered with pavement or structures, therefore the soils are not visible. Whatcom soil forms on hill slopes in volcanic ash and loess over glaciomarine deposits and moderately well drained. The typical profile consists of a surface layer of dark brown silt loam from 0-22.5 centimeters (cm) or 0-9 inches (in); a subsoil of dark brown silt loam from 22.5-40 cm (9-16 in) and light olive brown, mottled loam from 40-65 cm (16-26 in); and a substratum of light olive gray, mottled loam from 65-87.5 cm (26-35 in) and dark gray loam from 87.5-150 cm (35-60 in) (Goldin 1992:171-172). Labounty soil forms in depressions in volcanic ash and loess over glaciomarine deposits and is poorly drained. The typical profile consists of a surface layer of very dark grayish brown silt loam from 0-25 cm (0-10 in); a subsoil of grayish brown and light brownish gray, mottled loam from 25 to 40 cm (10-16 in), and grayish brown, olive gray, and light olive gray, mottled loam from 40-87.5 cm (16-35 in); and a substratum of gray loam from 87.5-150 cm (35-60 in) (Goldin 1992:172). Everett soil forms on outwash terraces in volcanic ash and alluvium over glacial outwash and glacial till deposits and is well drained. The typical profile consists of a surface layer of dark yellowish brown gravelly sandy loam from 0-15 cm (0-6 in); a subsoil of dark brown gravelly sandy loam from 15-32.5 cm (6-13 in) and strong brown gravelly sandy loam from 32.5-62.5 cm (13-25 in); and a substratum of dark brown very gravelly loamy sand from 62.5-102.5 cm (25-41 in) overlying dense glacial till (Goldin 1992:171-172).

Cultural Context

The APE is located within the traditional territory of the Lummi and the Nooksack (Suttles 1990:454-456; Suttles and Lane 1990:486, Indian Claims Commission 1974:149, 269, 297). The Lummi and Nooksack were semi-sedentary; permanent villages were generally established near a fresh water source during the winter, and temporary camps were utilized while traveling for seasonal food sources during the warmer summer months.

The Lummi had villages along the shores of Whatcom County from Point Whitehorn or Cherry Point to Chuckanut Bay and inland as far as Lake Terrell in the northeast, to the outlet of Lake Whatcom in the southeast and up the Nooksack River to near the present town of Ferndale (Suttles 1951). The Nooksack had villages along the Nooksack River watershed and the larger Fraser River Valley interior.

Non-native exploration of the waters of the Sound began in the late 1700s. Spanish explorer, Pantoja, mapped and described portions of the Bellingham Bay shoreline in 1791. He was followed by Galiano, Valdez, and the English explorer George Vancouver in 1792 (Suttles 1951, Roth 1926). An account of a battle on Padden Creek between Spanish soldiers and Puget Sound tribes was told to early settlers of Bellingham Bay. According to the account, several years before Vancouver passed through, the Spanish had make themselves unwelcome by mistreating the native residents. A confederation of Puget Sound tribes ambushed 400 Spaniards as they explored upstream of Padden Creek. The locals routed the Spaniards, killing most of them and the two galleons that carried away the survivors were later sunk by a squall in the straights (Bellingham Herald 1936).

Industrialization and settlement of the Bellingham Bay area didn't began until the mid-1800s when high demand for lumber and coal brought several early entrepreneurs to the area. John Thomas arrived in 1852 while searching for coal for the Hudson Bay Company. He discovered coal along the Bay's shoreline and quickly staked one of the first three land claims in Whatcom County. Thomas was also the first to stake a land claim along Padden Creek (Bourasaw 2007). In 1853, Russell Peabody and Captain Henry Roeder built a mill on the waterfall at the mouth of Whatcom Creek; however it proved not to be a profitable venture (Edson 1968). A few years after Roeder and Peabody built their mill, several investors from California established the Bellingham Bay Coal Company, which for a time became the area's largest employer (Oakley 2005). Edmund Fitzhugh was hired to manage the mine and claimed land in the Sehome Hill area. Associated mining camps, company stores and saloons sprung up along the bay and quickly adopted the name Sehome (Oakley 2005). Coal brought local legend Daniel Harris to the area in 1855 who quickly filed a claim on 146.44 acres of land originally settled by John Thomas. He continued to purchase acreage along the shoreline (Thacker 2008:7).

Worldwide and local demand of coal and lumber drew settlers to the Bellingham Bay area. Four small towns developed along the shores of the Bay including Sehome, Whatcom, Bellingham and Fairhaven and they boomed during the 1858 Fraser River Gold Rush. Populations declined after the gold rush panned out and in the 1870s when several local mines failed and the Whatcom Creek Mill burned down. However Michael Padden, the creek's namesake filed a homestead claim in 1873 for the Happy Valley and Padden Lake areas, where he wanted to build a town site. Unfortunately Michael Padden was murdered before he could see his dream to fruition. In early 1880 Padden was shot and killed by Thomas Clark, Jr. his neighbor's ten year old son while fencing a piece of disputed adjoining property (Bourasaw 2007). In 1881 a large group from Kansas called the "Washington Colony" re-established the Whatcom Creek mill renaming it the Colony Mill. The town of Fairhaven was platted in 1883 by Dirty Dan Harris, and included 85 blocks and nearly 3.2 square miles (Thacker 2008:7). The 1887 General Land Office (GLO) map shows the APE along Padden Creek as being owned by H. Deter.

A February 1887 article in the *Whatcom Reveille* newspaper reported, "Dan Harris of Fairhaven has gone to San Francisco to confer with railroad magnates. Dan's liberal offer (to donate waterfront land to any railroad that will come to Bellingham Bay) will build a city at Fairhaven." Local residents such as Captain Roeder donated 25-50% of their property or value to ensure Harris's success. John Padden donated a

portion of the original Padden homestead for the railroad and round house and the water rights for Lake Padden (Bourasaw 2007).

In 1888, the Bellingham Land Company purchased most of Harris's land claim with the intention of building a railroad connection to join with the new transcontinental line. That same year Nelson Bennett, Arthur Denny and Dexter Horton with financial backing from Charles Larabee started the Fairhaven Land Company (FLC). The FLC hired J.J. Donovan as their chief engineer and work began almost immediately on Whatcom County's first railroad, the Fairhaven and Southern Railroad (F & S). The F & S was completed east to Sedro-Woolley on Christmas Eve 1889 (Bourasaw 2007 and 2008). The following year the F & S was sold to transcontinental tycoon, James J Hill, who combined the subsidiary railroad lines into the Great Northern railroad (GNRR) and extended the F & S line to the east connecting with his Montana Seattle-line. Hinks (1890) plat map illustrates the F & S railroad grade running through the central portion of the APE (Figure 6).

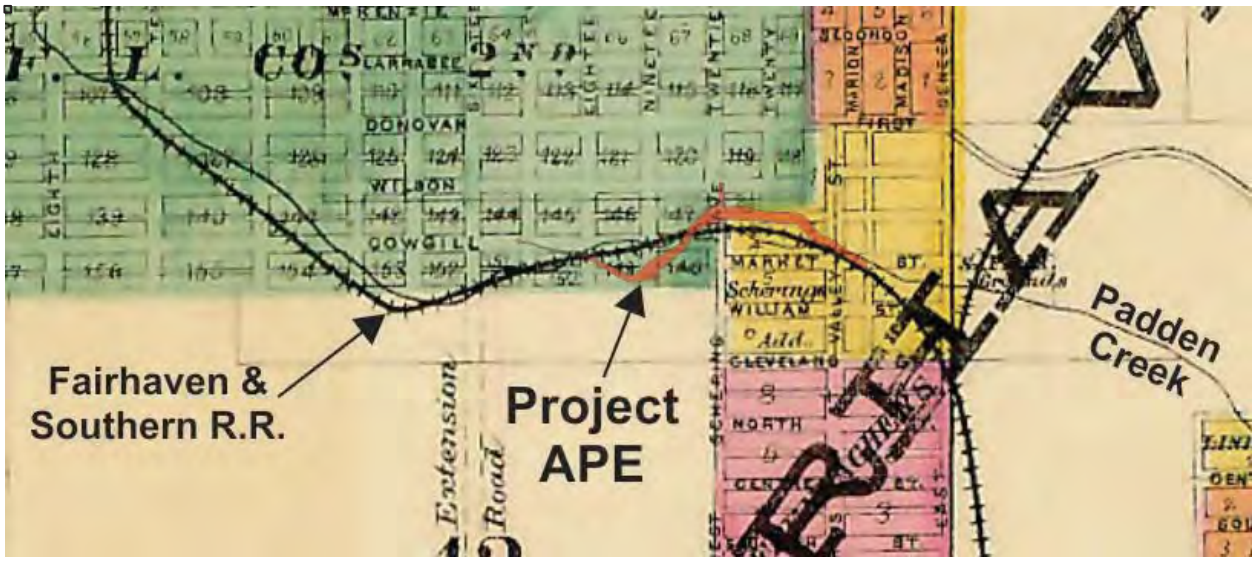

Figure 6. 1890 Plat map showing the APE in relation to the F & S Railroad line and Padden Creek (Hinks 1890).

With the arrival of the F & S, the Washington Improvement Co. began placing ads in newspapers as far away as Germany selling land and championing Fairhaven as the logical west coast terminus for the new transcontinental railroad. In 1890, Sehome combined forces and incorporated into the city of Fairhaven. In anticipation of arrival of the railroad and the associated population growth, Fairhaven began clearing land and filling parts of Bellingham Bay, building brick buildings, and building electric rail and trolley lines to serve its residents (Scherrer 2001).

Additionally, in the spring of 1891, Fairhaven city council began installing a sewerage system. J.J. Donovan, a member of the first city council, chairman of the sewerage council and chief engineer for the F & S Railroad, hired renowned engineer Benezette Williams to design a combination sewer system that would drain storm water and sewer for the Fairhaven south district (Gerhard 1907:1-2). A newspaper

article dated October 2, 1891 in the Weekly World specifically addresses the installation of the new Happy Valley Tunnel System.

> *"...the work between Seventeenth and Twenty-first streets should be begun at once, and awarded in time contracts. A tunnel through which the creek would pass should be made, and the council appropriated $20 for the expenses of such investigation. It was ordered that 310,000 bricks would be sufficient for the work".*

George Gerhard, the Fairhaven city engineer who managed the sewer system project gives his opinion about the Happy Valley Tunnel System: "building of a brick sewer 4x6 feet to drain a small valley about a mile from the business district that could been drained just as well by clearing out the logs in Patton and deepening the creek where needed" (Gerhard 1907:6-7). Gerhard (1907:10) reports the materials costs for a 4x6 foot brick sewer in tunnel in District 4 as $5.80 per foot of tunnel and $10.68 per foot of brick lining. Scherrer (2001) reports the final length and costs for the Happy Valley brick tunnel as: 2,696 foot long and a cost of $27,102.05. Gerhard (1907) also reports a 4x6 foot brick sewer in open cut within District No 5 that was 21,500 feet in length and total cost was $42,755.24 for excavation and brick masonry (1907:10).

A Fairhaven Land Co. map from 1891 shows a stylized birds-eye view of the city, showing the APE in relation to Happy Valley businesses, the F & S railroad grade and a partially buried Padden Creek (Figure 7). Unfortunately the development boom was in vein as in late 1891 it was announced that Seattle had been chosen as the western terminus for Great Northern. In response, development in Fairhaven slowed dramatically and many of the town's pioneers eventually sold their holdings and left town. Great Northern operated the original F & S line eventually tearing up the rails in 1903 (Bourasaw 2008). In 1912, ownership of the former F & S railroad grade was transferred to the Pacific Northwest Traction Company (PNTC) who operated the Interurban Electric Railway from 1912 to 1929 (Adams 1922). Bellingham Parks Department subsequently acquired and incorporated the former F & S rail grade into portions of SR 11 and created the Interurban Trail, which follows portions of the grade south through Fairhaven Park to Arroyo Park (Wessen 2005).

Figure 7. 1891 map of Fairhaven illustrating the APE in relation to the railroad grade, commercial businesses and Padden Creek (Fairhaven Land Co. 1891).

Previous Archaeology

Archaeological investigations on Bellingham Bay began in the early 1900s when Albert Reagan identified several prehistoric shell midden sites on the Lummi Peninsula and a village at the mouth of the Nooksack River (Reagan 1917). Since Reagan's investigations, the majority of archaeological research in the area has been limited to sites along the shores of Bellingham Bay, where over 20 precontact archaeological sites have been recorded, including two along the original mouth of Padden Creek

(45WH60 and 45WH47). Dugas and Larson (1999) completed an investigation of over 16 miles of shoreline along Bellingham Bay to determine high, moderate, and low probability areas for encountering cultural resources. Stilson et al. (2002) completed a similar cultural resource evaluation of the Lake Whatcom watershed that focused on the identification of all known cultural resource within the watershed. No fieldwork was conducted for either project and no new cultural resources were identified. Other cultural resource investigations conducted in the vicinity of the APE include project-specific surveys for residential development (Baldwin and Bialas 2009; Bush 2005; Bush and Ferry 2006; Meidinger et al. 2010; Reid et al. 2006; Shong and Miss 2004, 2005, 2006; and Wessen 2005, 2009a) erosion control (Croes et al. 1996), waste water treatment and quality (DeJoseph and Hicks 2006; Moreno 2011; Pipe 2007) and environmental restoration (Gilpin 2007a, 2007b; Luttrell 2005).

Numerous historic structures have been inventoried near the APE and two NRHP listed historic districts in Fairhaven, the Fairhaven and South Hill Historic Districts. The Fairhaven Historic District is located 0.4 miles northwest of the APE and includes 5.7 acres along Harris Avenue between 12th and 10th Streets. The district encompasses sixteen buildings dating from the surge in population of 1889-1890 to the First World War (Potter 1976). The South Hill Historic District is situated 0.4 miles northwest of the APE and is bounded by Knox Ave, 11th, State, Cedar, and 17th Streets. The South Hill District consists of 644 residential structures that were built between 1886 and 1945 (Pinyerd and Felber 2009).

According to the DAHP *WISAARD* database there are three previously recorded residential Historic properties built from 1895 to 1910 located within the APE: 1714 22nd Street, 1720 22nd Street and 2015 Old Fairhaven Parkway. These residential houses have only been inventoried from information made available at the Whatcom County tax assessor's office as part of the 2011 HPI Upload Project conducted by Artifacts Consulting, Inc.; eligibility has not yet been determined for these structures. Currently only two of the structures are still standing; the structure at 1720 22nd Street has been recently torn down and demolished. Neither structure at 1714 22nd Street nor 2015 Old Fairhaven Parkway will be impacted by the current project and as such were not evaluated as a part of this assessment.

According to the DAHP *WISAARD* database there are 11 previously recorded archaeological sites located within one-mile of the APE (Table 1). Six are precontact sites (45WH60, 45WH41, 45WH71, 45WH78, 45WH769 and 45WH54), three are historic sites (45WH926, 45WH732 and 45WH725) and two are multi-component sites (45WH47 and 45WH50) containing both prehistoric and historic artifacts. Only two of these previously recorded sites are located within 0.5 mile of the APE (5WH926 and 45WH732).

Table 1. Archaeological sites previously recorded within a one mile radius of the APE.

Site Number	Site Component	Site Type	Distance from APE
45WH926	Historic	Refuse scatter and structures	0.5 miles northwest
45WH732	Historic	Commercial property	0.5 miles northwest
45WH47	Precontact and Historic	Precontact shell midden and historic refuse dump	0.6 miles west
45WH60	Precontact	Short term camp and shell midden	0.6 miles northwest
45WH725	Historic	Railroad property	0.9 miles south
45WH41	Precontact	Camp and shell midden	0.9 miles northwest
45WH71	Precontact	Lithic material	1 mile west
45WH78	Precontact	Petroglyph	1 mile south
45WH769	Precontact	Shell midden	1 mile west
45WH50	Precontact and Historic	Precontact camp, shell midden and Historic burial	1 mile southwest
45WH54	Precontact	Shell midden	1 mile southwest

Site 45WH926 is a historic refuse scatter and structures located 0.5 miles northwest the APE. This site was recorded by Arthur in 2012 as the ruins of the Citizen's Bank/Sandwick building foundation dating from 1890 to 1949. The site covers an area of 100 by 50 ft (30 by 15 m) (Arthur 2012).

Site 45WH732 is a historic commercial property located 0.5 miles northwest the APE. The site was recorded by Mike Shong in 2004 as the remains of the Menning & Co. Saloon that operated from 1890 to 1913. The site covering an area of 55 by 25 ft (16.8 by 7.6 m) artifacts recorded included coins, boards, pipe stems, buttons, shot glass fragments, bottle neck fragments, and various construction materials (Shong and Miss 2004).

Site 45WH47 is a precontact shell midden located 0.6 miles west/northwest from the APE on a bank terrace of Padden Creek just south of the original creek mouth. The site was initially recorded by Grabert et al. in 1973 as a thin shell midden with associated artifacts measuring 170 m long and 20 to 28 m wide. That summer, Dr. Grabert conducted an archaeological field school at the site and excavated a 1 x 18 meter-long trench. They located four features of fire modified rock, determined that the stratified shell midden was 75 centimeters thick, and collected over 100 artifacts of formed stone and bone tools. An

additional unit was excavated in 1975 and located 11 more artifacts (Reed and Campbell 2008). A site boundary delineation study conducted by Kelly Bush located a large berm of historic rubbish, likely associated with the development of Fairhaven (Bush and Ferry 2005). Subsequent monitoring on site during residential construction however indicated that the historic berm rubbish dates between the 1930s and 1950s and is not related to early Fairhaven (Meidinger et al. 2010). Dr. Sarah Campbell and students at Western Washington University (WWU) have analyzed the excavated field school collection by Grabert and determined that the precontact artifacts date to the Locarno Beach phase (3200-2400 before present) (Reed and Campbell 2008).

Site 45WH60 is a precontact short term camp and shell midden located 0.6 miles northwest the APE, north of the original Padden Creek mouth on what used to be the shoreline. The site was initially recorded by G. F. and J. Grabert in 1975 as sparse shell midden and FMR scattered on a dike and into a cove. The natural tidal mud flats have been filled and built upon and the site been partially filled over and partially dug out. Due to disturbance the sites dimensions were not recorded. No formed tools were located and very little information is available about the site (Grabert and Grabert 1975).

Site 45WH725 is a historic railroad property located 0.9 miles south of APE on the north side of the lower Chuckanut Creek Canyon**.** The site was initially recorded by Wessen in 2005 as a 100 m (328 ft) portion of the former Pacific Northwest Traction Company's electric rail system (the 'Interurban') dating from 1912 to 1929. Wessen reports the site consist of "railway grade atop an earthen berm and three concrete piers that are footings for the north side of a steel railway trestle (the 'Hibridge') that was formerly present…" Several bricks were also recorded that may be associated with the 'Hi bridge' (Wessen 2005). This is a part of the same rail grade line that Old Fairhaven Parkway now overlays.

Site 45WH41 is a precontact camp and shell midden located .9 miles northwest of the APE. This site was originally recorded in 1972 by G.F. Grabert. Grabert described the shell midden as black sandy humic soil with fire-modified rock (FMR), butter clam and heart cockle shell. The dimensions of this site are unknown because it is partially buried by a landfill and industrial buildings. The site was recorded as disturbed by the industrial development but believed to have some intact deposits (Grabert 1972).

Site 45WH71 is precontact lithic material located 1-mile west of the APE on a terrace near Post Point. This site was recorded by Edris and Walker in 1970 and is characterized by three cobble choppers over a 40- to 50-m surface area (Edris and Walker 1970).

Site 45WH78 is a precontact petroglyph located 1-mile south of the APE on a pebble beach below a large outcropping of Chuckanut Sandstone at the high-tide line of Chuckanut Bay. The site was first recorded by Jacques Pflanzer in 1977 as a single sandstone boulder with the pecked design of an eye. Richardson (1984) also reported this petroglyph as part of site 45WH54. In 2004, the petroglyph was removed by Tim Wahl of Bellingham City Parks and Sarah Campbell of WWU to prevent theft or vandalism. It is currently located at Bellingham City Parks' Woodstock Farm under the stewardship of Tim Wahl, by arrangement with DAHP. A site form update was submitted in 2006 documenting the

change in site location and describes the petroglyph design as traditional Salish design (Campbell and Meidinger 2006).

Site 45WH769 is a precontact shell midden located 1-mile west of the APE. This site was recorded by Gilpin in 2007. She describes the shell midden as containing fish, bird and small mammal bones associated with FMR and covering an area 10.1 ft by 4.6 ft (35 by 15 m) (Gilpin 2007).

Site 45WH50 has both precontact and historic components and is located 1-mile southwest of the APE. The site was initially recorded in 1974 by G.F. Grabert as a precontact camp and shell midden and historic burial. Site dimensions are reported for the precontact component as no greater than 30 by 10 m (9 by 3 feet) and very thin from 10 to 30 cm (4 to 12 in). The burial is apparently one of five Euroamericans that died in a shipwreck in the late 1800s or early 1900s (Grabert 1974).

Site 45WH54 is a precontact shell midden located 1-mile southwest of the APE along the hill slope on the shore of Chuckanut Bay. This site was recorded Western Washington State College in 1974, however the site form on file is incomplete and not legible. The site was rerecorded by Richardson in 1984, which conducted test excavations and defined four separate areas of shell midden and two hearth features. The site was surveyed in 2005 by WWU defining the site dimensions as 35 m long by 4 m wide and extending from the surface to a depth of 33 cm (Campbell et. al 2006). Cultural material reported includes a lithic cobble chopper and FMR. Campbell et. al (2006) also report a radiocarbon date of Cal BP 670 to 530, dating the site to the Strait of Georgia Cultural Phase (Campbell et. al 2006).

Expectations

The APE is located in an area of high probability for historic properties. The APE would have been attractive for precontact settlement, as Padden Creek provided fresh water, salmon and resource gathering, as well as an inland travel corridor to Lake Padden. Historical background research confirmed that the Happy Valley Tunnel System was constructed in 1891-1892. Modifications and improvements to the Happy Valley Tunnel System have undoubtedly occurred since its initial construction. On such improvement occurred in 1949 with the addition of 60-inch diameter culverts at the western extent of the project area (Mary Webber, personal communication 2012). The F & S Railroad grade (later utilized by Great Northern Railroad and the Interurban Electric Railway) was built in 1888 formerly ran alongside and intersected portions of the APE. There have also been numerous residential and commercial structures built in the area immediately surrounding the APE.

If cultural resources were encountered in the APE, precontact types might include occupation sites, trails, shell midden, lithic materials and hearth features associated with resource procurement and processing. Historic types might include evidence of the Happy Valley Tunnel System, F & S Railroad, logging properties, structural remains, household and commercial debris scatters associated with early Fairhaven.

Field Investigations

Methodology

Field investigations for this project were conducted by DAR field director, Brett Meidinger. Field investigations consisted of archaeological monitoring and field survey. Archaeological monitoring was conducted on July 30, 31 and August 3, 2012 and included seven geotest bores and three backhoe trenches. Geotest boring was carried out using a hollow stem, 22.5 cm (9 in) diameter mechanical auger drill (Figure 8). The drill advances and 45 cm (18 in) sampling rods are pushed within the hollow center of the auger drill being driven into the underlying sediments collecting the sample within the rod (Figure 9). After the drill advanced the sampling rod was pulled out, opened, and examined for cultural material and buried soils by the monitor. The sampling rod was cleaned and returned into place within the auger drill. Additional sections of the auger drill were added as the machine advanced to depth. After each bore sampling was complete a bentonite mixture was pumped into the excavated bore location to backfill the hole created by the removed sediment.

Figure 8. Auger excavating geotest borings along the eastern APE.

Figure 9. Geotest boring (B2) sample showing the upper sediments.

Backhoe trenches were excavated using a mini backhoe using a flat 1 ft wide bucket (Figure 10). The excavated deposits were removed and piled next to the trench for later trench backfilling. The trench and spoils were also inspected for cultural materials and buried surfaces prior to the trench being backfilled.

Figure 10. Backhoe excavating geotest trenches along the APE within the park.

A process to record, evaluate and manage inadvertently discovered deposits and isolated artifacts was adopted in the event that cultural materials were encountered during monitoring. This included taking photographs, recording narrative descriptions of the construction activities and observed sediments and documentation on project maps. General profiles of the exposed sediments in the boring samples and the trench sidewalls were recorded throughout monitoring. Details regarding the depth and sediments encountered are presented in Appendix A.

Archaeological survey was conducted on August 29, 30 and September 18 - 20, 2012 and consisted of visual reconnaissance of the APE and subsurface testing. Visual reconnaissance consisted of walking transects spaced at 10 to 15 m (33 to 49 ft) intervals oriented generally east to west were followed along the Padden Creek channel taking special note to scan any areas where the subsurface soil was exposed. Subsurface testing involved a regiment of manually excavating shovel probes (SPs) along the APE. A total of 32 SPs were excavated. SPs were systematically placed at 10 to 15 m (32.8 to 49.2 ft) intervals to identify any buried cultural materials or deposits and assess subsurface soil conditions. Standard SPs consist of cylindrical pits 50 cm (20 in) in diameter. The predetermined target depth for SPs is a 100 cm (~3 ft); however, individual depths of the SPs are ultimately determined by the conditions present in each hole. Sediment excavated from probes is screened through ¼-inch hardware screen. A sketch map, based on the preliminary site plans was continually updated throughout the assessment (Figure 11). Details regarding the location, depth, sediments encountered are recorded for each shovel probe are presented in Appendix A. All excavations were completely backfilled and their locations marked on project maps.

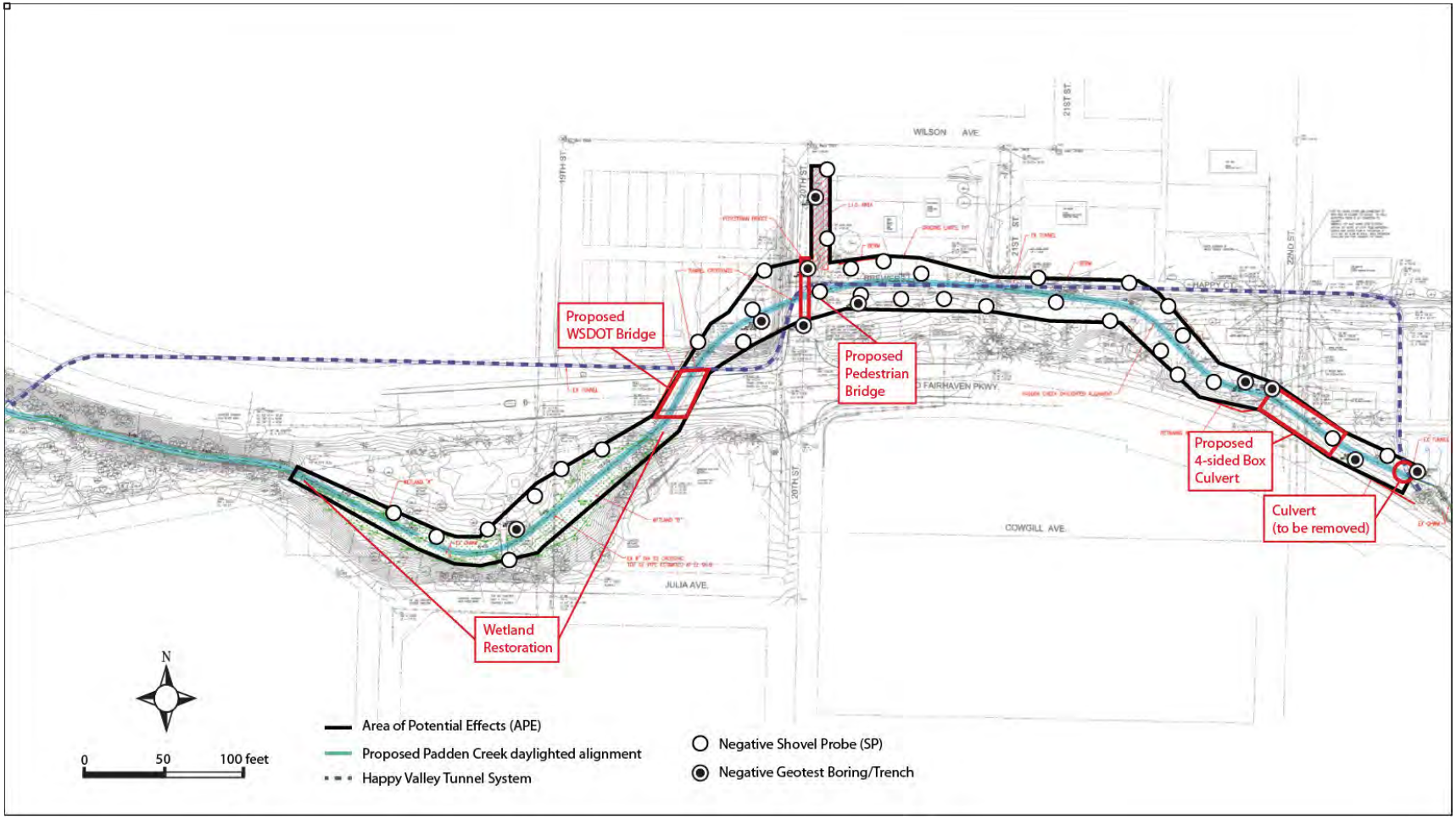

Figure 11. Location of shovel probes and geotest probes and trenches excavated throughout the APE for the Padden Creek Daylighted Channel project (*Courtesy of* GeoEngineers, Inc. and modified by DAR)

Results

Seven geotest bores (B1 thru B7) and three geotest trenches (T1 thru T3) were excavated within the APE. Numerous buried utilities and the steep slope of the western APE hampered geotest placement therefore most were conducted within the northeast portion of the APE, with only two geotests B7 and T2 excavated west of 20th Street. Given the capability of the auger to drill to depths exceeding 0.6 m (25 ft) below the surface, boring locations were concentrated at the proposed 20th Street bridge and near the upstream tunnel entrance of the Happy Valley Tunnel System.

Monitoring began with boring location B3 within the center of the roadway of 20th Street. Rod samples were collected every 75 cm (2.5 ft) and sediments drilled up to 7.6 m (25 ft) below the surface. The profiles of rod samples were examined for the presence of cultural material and then bagged and collected by the Geotechnical Engineer, Aaron Hartvigsen. The final excavated borehole was too small in diameter to view or record the side wall profile.

Geotest trenches T1 and T3 were conducted between 20th and 22nd Street and T2 was excavated near the delineated wetland area in Arroyo Park. The trenches opened a wider excavation with visible trench wall profiles to depths of approximately 2.74 m (9 ft) and the sidewall profiles were examined for the presence of cultural material and buried surfaces. The resulting excavated backdirt was troweled through and examined, but it was not screened. A typical profile of the soils observed during geotest trenching can be seen in Figure 12.

Figure 12. Geotest trench T2 (formerly T5) showing typical soils near wetland B.

Shovel probe (SP) excavation of the western 198 m (675 ft) of the APE was precluded by the steeply sided slopes of the Padden Creek channel. Typically, SPs were excavated at approximately 10-15 m (32.8-49.2 ft) intervals along both sides of the proposed channel alignment; however, the interval was altered to avoid buried utilities and roadways. The majority of the SPs (n= 25) were excavated east of 20th Street and seven SPs were excavated west of 20th Street near the wetland area. The typical soils observed during shovel probe testing can be seen in Figure 13.

Figure 13. Shovel Probe 17 showing mottled fill deposits on top of a buried topsoil overlying graded glacial subsoils.

Soils exposed during geotest monitoring and subsurface testing revealed a soil profile similar to that of the Urban land-Whatcom-Labounty complex described by the USDA NRCS (2012). There was however substantial modification noted in the profiles from post depositional disturbance such as grading and filling events. The mixing of sediments was observed in the majority of SPs excavated.

Much of the eastern APE was found to be covered with a large amount of secondary fill deposits, and in some cases the native soil has been graded to the glacial substratum. Though the level and composition of fill varies in thickness from 30 cm to 2.4 m (1 to 8 ft), it is largely brown compact silt loam with gravels, mottled pockets of olive brown silt sand, bluish-gray clay, gray silt sand and gravel, and dark brown loam. The soils underlying the fill deposits are at least partially disturbed native deposits including dark brown silt loam varying in thickness from 10 to 25 cm (4 to 10 in) and containing a mix of displaced structural elements (bricks, concrete nails, sheet metal, pane glass and wood fragments) likely associated with residential demolition and commercial development within the APE. Mottling and clay inclusions within this topsoil suggest this surface had been previously disturbed, possibly related to land clearing and logging operations or more likely by early railroad construction and residential development. Underlying the disturbed native soil is olive brown sandy silt transitioning into bluish-gray clay of glaciomarine origins at 2.7 m (9ft).

The central portion of the APE revealed more variation in soil type. Areas located near the wetlands generally consist of two profiles. One, an upper 35 cm (14 in) of a very dark grayish brown silt loam. Below the brown silt loam topsoil is gray silt clay to 1.2 m (4 ft). Underlying the gray silt clay is a pale green silt clay containing iron oxides and increasing cobbles to a depth of 2.6 m (8.5 ft) and transitioning into bluish-gray clay of glaciomarine origins at 2.9 m (9.5 ft). The second soil profile encountered in the central portion of the APE appears to have been directly impacted by flood events resulting in fine grain sediment deposition. The areas of gravel fill overlying a mottled brown silt loam topsoil in the upper 35 cm (14 in) overlying a brown silt sand to approximately 50 cm (20 in). The brown sand transitions into an olive brown silt fine sand with depth. No evidence for buried archeological deposits or materials were encountered during subsurface monitoring or testing.

Pedestrian survey was hindered by the steeply sided slopes of the Padden Creek channel along the western APE. The upper terrace landform immediately overlooking the channel was surveyed in order to view the exposed channel cutbanks. The base of the channel and the boundary of the delineated wetlands A and B were surveyed where water depth allowed accessibility. Ground surface visibility was moderate within the steeply sided channel and was relatively poor in the wetlands due to standing water and dense vegetation. Visibility along the eastern portion of the APE was higher along road right of ways and within residential lawns with a few exposed mole hills, but overall visibility was low. Cultural materials on the surface consisted of an array of modern garbage and displaced structural elements (bricks, concrete nails, sheet metal, pane glass and wood fragments) likely associated with residential demolition and commercial development.

Pedestrian survey identified one historic property (The Happy Valley Tunnel System) and two archaeological sites (0712A-Temp-1, a historic road [Happy Court], and 0712B-Temp2, a historic railroad property [F & S Railroad grade]) within the APE (Figure 14).

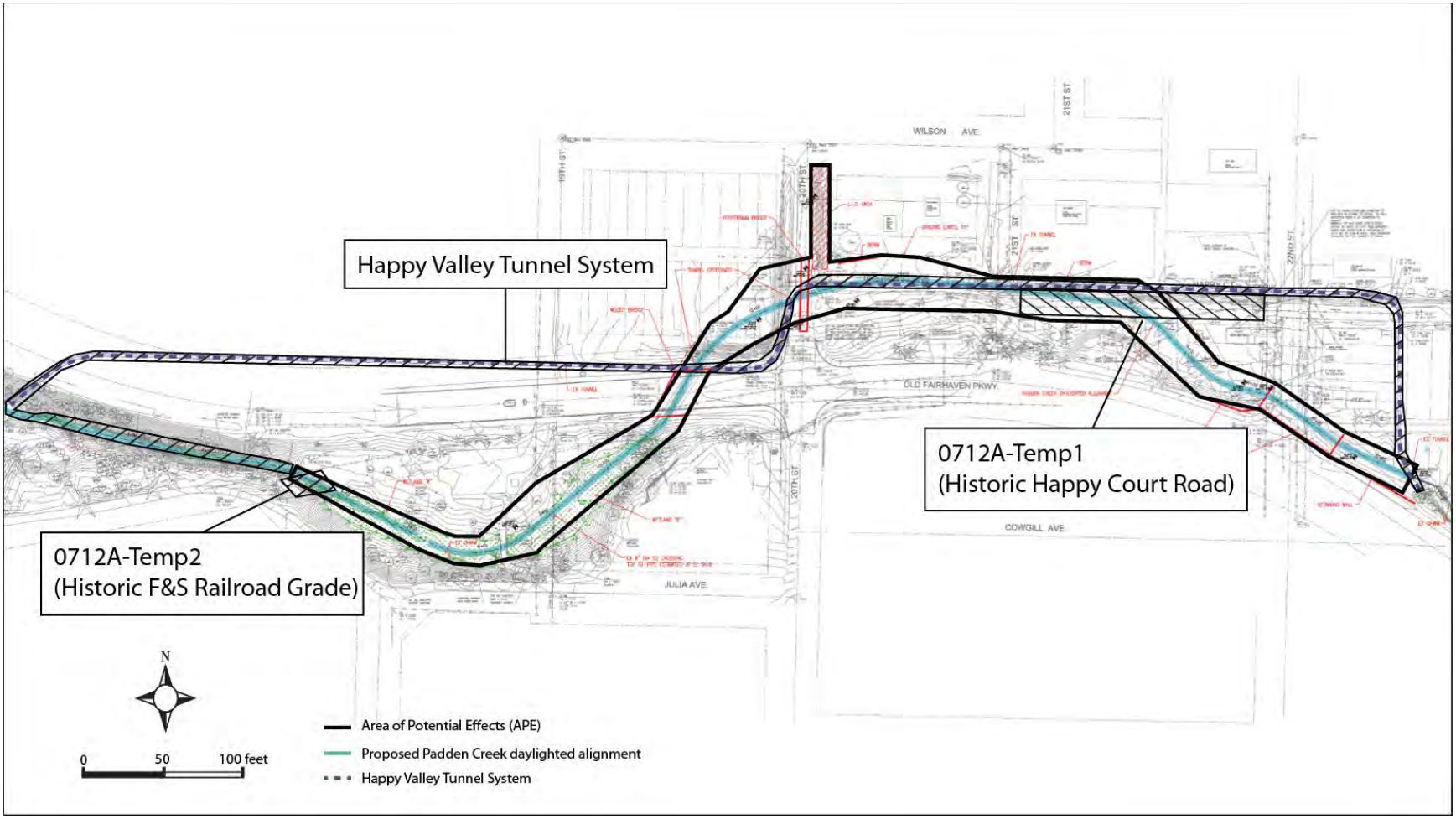

Figure 14. Location of sites identified and recorded within the APE.

Historic Property (Happy Valley Tunnel System)

The Happy Valley Tunnel System reroutes 2,696 feet of Padden Creek from roughly 22nd Street at Old Fairhaven Parkway to Fairhaven Park near 17th Street in the Happy Valley neighborhood of Fairhaven in Bellingham. According to published documentation, the Happy Valley Tunnel System was designed by civil engineer Benezette Williams and was constructed between 1891 and 1892 in anticipation of the Great Northern Railroad, which was proposed to end at Fairhaven. Rerouting the creek facilitated wetland draining in the lower valley, and carrying both drainage and sewage from surrounding land and homes. It is thought to be one of the earliest public storm-water systems in Bellingham.

Seven features comprise the portion of the Happy Valley Tunnel System located within the APE including the upstream headwall, the upstream retaining wall, the tunnel, a culvert, a drainage ditch, the downstream headwall, and the downstream retaining wall.

Padden Creek enters the Happy Valley Tunnel System approximately 164-feet southeast of 22nd Street at the upstream headwall (Figure 15). The upstream headwall is a 6-foot tall poured concrete facing with angled wing walls and a metal grate that covers the tunnel opening. On the south wing wall, is a 60-inch diameter mortared concrete outfall pipe and a small section of the poured concrete has been repaired with stacked cast-in-place concrete bags that reach at least 10 courses high. At the north wing wall, a retaining wall extends southeasterly for an undetermined distance following the north side of the creek channel (Figure 16). The retaining wall is flat faced and characterized by its brick and mortared lining, measuring approximately 6 feet high and 1 foot thick. The base of the retaining wall is undercut by erosion in some areas along the creek waterline. The upstream headwall was reportedly upgraded sometime in the 1960s.

From the upstream headwall, Padden Creek is diverted into a tunnel (Figure 17). The tunnel is comprised of an approximately 250-foot long 5-foot diameter poured concrete culvert pipe at the entrance and exit of the system. In other locations, the tunnel is egg shaped, measuring 6-foot high by 4-foot wide, and is characterized by a 0.5-inch thick mortared brick lining. The tunnel has a notched base ranging from 4- to 5-inches wide and from 3- to 6-inches deep.

At the southeast corner of Happy Court and 22nd Street, Padden Creek is diverted beneath a culvert (Figure 18). The L-shaped culvert is comprised of three pipes that are flat faced and partially buried within an east to west oriented drainage ditch along the north side of a remnant Happy Court road alignment (see HPI). Two of the pipes measure 2-feet in diameter and drain east; and, the third pipe measures 1-foot in diameter and drains south. The headwall measures 2-feet in height and is 14-inches thick. The east face of the culvert headwall measures 9-feet in length and the south side wing wall measures 3-foot 7-inches. There was likely once a wing wall along the north side, however it has either been removed or has been buried due to slumping. The east wall of the culvert is covered by red brick facing with each brick measuring 3.5- by 8.5-inches being stacked at least 5 courses high.

From the culvert, an approximately 10-foot wide by 2-foot deep earthen drainage ditch extends east to west along the north side of a former remnant of Happy Court Road. The ditch is present for approximately 350-feet until it disappears near the intersection of the remnant 21st Street road alignment, likely draining into a buried culvert. The ditch intermittently continues west for another 150-feet, although more shallow and less defined, until it ends at a north to south oriented drainage ditch near the intersection with 20th Street.

Padden Creek exits the Happy Valley Tunnel System at the downstream headwall located at Fairhaven Park approximately 100-feet southwest of 17th Street (Figure 19). The downstream headwall is an approximately 6.5-foot tall concrete arch facing with angled wing walls. To the east is the abandoned creek channel. Here, retaining walls extend for approximately 300-feet and along the north and south sides of channel bed (Figure 20). The retaining walls are sloped and constructed of stacked cast-in-place concrete bags. The retaining walls vary from 5- to 6-feet in height. The concrete reinforcement along the channel bed floor is sloped and overlaps as it follows the creek downstream and measures approximately 10-feet wide.

Figure 15. The upstream headwall, view southwest. Note the retaining wall reinforcement along the south wing wall.

Figure 16. The north side of the upstream retaining wall, view northeast.

Figure 17. View of the interior of the tunnel (courtesy of Rick Lippold).

Figure 18. The culvert headwall, view southeast.

Figure 19. The downstream headwall, view northeast (courtesy of Aaron Hartvigsen, GeoEngineers Inc.). Note the retaining wall reinforcement along the southeast wing wall.

Figure 20. The downstream retaining wall along the creek channel banks and bed floor, view west.

In addition to the recorded features there are the ends of at least nine concrete culvert pipes, three being 61 cm (2 ft) and six being 1.2 m (4ft) in diameter located at roadway crossings intersections. These culvert pipes appear relatively recent and their relationship to the tunnel system is unclear, they were therefore not recorded as contributing elements to the brick tunnel system historic property.

The Happy Valley Tunnel System was built in 1891 to 1892 and therefore meets the 50 years minimum age requirement as a historic property. The portion of the Happy Valley Tunnel System located within the APE appears to be largely intact and is currently functional. As such, the Happy Valley Tunnel System is recommended eligible for listing on the NRHP: under Criteria A for its association with the development and early infrastructure of the Fairhaven neighborhood and the greater city of Bellingham; under Criteria C, as an example of a nineteenth century brick lined tunnel; and, under Criteria D for the potential to yield additional information for understanding the tunnel system and its related support structures. A historic property inventory form for the Happy Valley Tunnel System has been prepared and submitted to DAHP. A copy is provided in Appendix B.

Archaeological Site 0712B-Temp 1 (Historic Road)

The 7.6 m (25 ft) wide historic Happy Court road extends west from 22nd Street for 122 m (400 ft) to the current dead end of 21st Street. The road was built or was formalized enough to be recorded on the 1890 plat map of Fairhaven (Hinks 1890). The road does not appear on the 1889 plat map that shows the F & S Railroad grade (Campbell 1889). However it is interesting to note that the 1891 Fairhaven Land

Co. birds-eye view illustration clearly shows the F & S grade overlying the eastern extent of Cowgill Road, which is also not indicated on Campbell's 1889 plat map, yet must have been constructed prior to the 1888 railroad construction.

The timing of its construction during Fairhaven's speculative real estate boom indicates the road corridor is associated with accessing the commercial and residential lots along Happy Court. Moderate impacts have already occurred to the road from the installation of the Happy Valley tunnel system and drainage ditch. A Washington Archaeological Site Inventory Form for the historic road has been prepared and submitted to DAHP. A copy is presented in Appendix C.

Historic archaeological site 0712A-Temp1 was built in 1889 to 1890 and therefore meets the 50 years minimum age requirement as a historic property. The road corridor has suffered severe impacts from construction of the F & S Railroad, the installation of the Happy Valley Tunnel System and later highway SR 11 south side truck route construction and therefore lacks integrity. Due to the fact that the road was not directly associated with the railroad operation and has suffered significant impacts, it is not considered a contributing element and is recommended not eligible for listing in the NRHP.

Archaeological Site 0712B-Temp 2 (Historic Railroad Property)

A 9 m (30 ft) wide segment of the historic Fairhaven and Southern (F & S) Railroad grade intersects the project APE for 7.6 m (25 ft) where it crosses Padden Creek and continues to the southwest and northeast outside of the APE. The railroad grade consists of an earthen berm has been leveled to the northeast (Figure 21 and Figure 22).

The grade was constructed for the F & S Railroad and used from 1888 to 1903. Later, in 1912 – 1929 it was used by Pacific Northwest Traction Company's electric Interurban Railway. It is interesting to note that the grade begins at the same location that the Happy Valley tunnel system creek channel retaining wall Feature 5 terminates, indicating a possible association between the realignment and stabilization of Padden Creek and the F & S Railroad grade.

Historic archaeological site 0712A-Temp2 was built in 1888 to 1889 and therefore meets the 50 years minimum age requirement as a historic property. The Fairhaven and Southern Railroad corridor has suffered severe impacts from the removal of the F & S rails, the later installation and removal of the Interurban rails, and the grading of the city park 33 m (100 ft) to the northeast and therefore lacks integrity. Due to the fact that the railroad grade corridor has suffered significant impacts, it is not considered a contributing element and is recommended not eligible for listing in the NRHP. A Washington Archaeological Site Inventory Form for the historic railroad property has been prepared and submitted to DAHP. A copy is presented in Appendix D.

Figure 21. The F & S Railroad grade intersecting Padden Creek, view southwest. Note the channel retaining wall.

Figure 22. The F & S Railroad grade, view northeast.

Recommendations

Based on the results of DAR's cultural resources assessment, there is one historic property located within the APE that appears eligible for inclusion in the NRHP: the Happy Valley Tunnel System. As much of the Happy Valley Tunnel System located within the APE will be avoided; and, any and all disturbance will be confined to a later addition (e.g. 60-inch diameter culvert added in 1949) that does not contribute to the property's greater significance, DAR recommends the Corps assert a determination of no adverse affect to the State Historic Preservation Officer (SHPO), the Tribal Historic Preservation Officer (THPO) and any other consulting or affected parties for the proposed undertaking.

DAR additionally recommends the project proponents be familiar with provisions of 36 CFR part 800, particularly the sections regarding post-review discoveries (36 CFR part 800.13). While shovel testing the APE is a cost effective means to locate subsurface deposits, it is certainly not exhaustive. Therefore no shovel testing regiment is 100% accurate in recovering or locating buried cultural sites. In the event any items of cultural patrimony are encountered, by law all work must cease. It is further recommend the proponents become familiar with Washington State laws, particularly Revised Code of Washington (RCW) Chapter 27.53.060 and RCW 27.44.040. Although the state statutes do not necessarily apply to a federally permitted project, Section 106 leaves some issues unresolved, and guidance on the treatment of archaeological resources and human remains are generally taken from the RCWs. The following is only offered as a guide and is not the complete text of any code, regulation or law. Washington State law provides for the protection of all archaeological resources under RCW Chapter 27.53, Archaeological Sites and Resources, which prohibits the unauthorized removal, theft, and/or destruction of archaeological resources and sites. This statute also provides for prosecution and financial penalties covering consultation and the recovery of archaeological resources. Furthermore, RCW Chapter 27.44, Indian Graves and Records, states that the willful removal, mutilation, defacing, and/or destruction of Indian burials constitutes a Class C felony. The assessment of the property has been conducted by a professional archaeologist and meets or exceeds the criteria set forth in RCW: 27.53 for professional archaeological reporting and assessment.

Post Review Discovery (inadvertent discoveries)

Should intact cultural/archaeological resources be encountered during excavation and construction, the following section establishes provisions for the professional archaeological treatment of cultural materials. Provisions of the Cultural / Archaeological Resource Procedures are as follows:

a. Archaeological monitoring will be conducted by a professional archaeologist who meets the Secretary of the Interior's qualifications (36 CFR Part 61) and has any specialized experience and expertise necessary to will take place during all ground disturbing activities which have the potential to penetrate native deposits within the project area.

b. The construction contractor will brief the archeologist on any health and safety elements under which the archaeologist will perform the monitoring. The archaeologist will provide any necessary personal protective equipment (e.g., hard hat, steel toed shoes, and safety glasses) as required for project health and safety.

c. If any staff, county or construction employee, contractor or subcontractor believes that any intact cultural deposits have been encountered at any point during construction, all work adjacent to that discovery shall cease. In the event that the archaeologist determines the material is intact, the project manager will notify the Corps, the State Archaeologist representing the Washington State Historic Preservation Officer (SHPO) and appropriate cultural resources personnel for the Lummi Nation and the Nooksack Tribe. A cultural resource discovery could be prehistoric or historic and consist of, but not be limited to:

- intact strata or facies of shell or other anthropogenic soil horizons;
- areas of charcoal or charcoal – stained soil and stones;
- stone tools or waste flakes (i.e. an arrowhead, or stone chips);
- bones, burned rocks, or other food related materials in association with stone tools or flakes; or
- a cluster of tin cans or bottles, maritime, logging or agricultural equipment older than 50 years.

d. In order to protect the integrity of an archaeological site or deposits that may be eligible for listing in the National Register of Historic Places (NRHP) appropriate steps to protect the discovery site, including but not necessarily limited to, ceasing all work in an area of stoppage adequate to provide for the total security, protection, and integrity of the resource, and contacting a professional archaeologist, DAHP and interested Tribes to properly assess the find. If site boundaries are not immediately discernible and a concerted effort is needed to define the boundaries, character and extent of the material a halt to all project work might be necessary. Vehicles, equipment, and unauthorized personnel will not be permitted to traverse the discovery site. Work in the immediate area will not resume until treatment of the discovery has been completed following provisions for treating archaeological or cultural material as set forth in this document.

e. The professional archaeologist, in cooperation with the construction manager, will contact: the Corps project manager; Dr. Robert Whitlam, State Archaeologist at SHPO; Lena Tso, Tribal Historic Preservation Officer (THPO) for the Lummi Nation; and, George Swanaset, Jr., Cultural Resources Officer, Nooksack Tribe, to immediately report all unanticipated discoveries of cultural resources during active monitoring. All material will be treated as potentially significant. Any material encountered during construction, and deemed intact and potentially at risk for disturbance, will be protected from impact until data recovery or avoidance measures are implemented. Notifications of unanticipated discovery will begin with the Corps, the SHPO and THPO. Construction will be halted within the immediate area of discovery and the scene will be protected until consultation to determine an appropriate course of action.

f. Where cultural resources are encountered during construction, but additional project affects to the resources are not anticipated, construction may continue under monitoring while documentation and assessment of the cultural resources proceed. Work will continue to the extent that no additional impacts to resources can take place. The total area of work stoppage will be adequate to provide for the security, protection, and integrity of the discovery and may continue at the discovery location only after the process outlined in this plan is followed and the parties are satisfied adequate measures to secure or salvage the archaeological data have been made.

g. Routine documentation of cultural material not threatened by project actions should not impact construction schedules. Where complex or extensive cultural remains are encountered the project manager and archaeological personnel will determine the appropriate level of documentation and treatment of the resource. In the case of human remains, burials or interment features the Corps, SHPO, and THPO would be consulted as outlined in the special provisions section below.

h. The archaeologist(s) will ensure proper documentation and assessment of any encountered intact cultural resources. All prehistoric and historic cultural material discovered during testing will be recorded by a professional archaeologist. Profile sketches, photographs and organic samples for testing may be collected as the situation requires or permits. Intentional excavation into intact deposits may be required to illustrate integrity of the deposit to help address the question of eligibility for listing of the site in the NRHP. Site overviews, features, and artifacts would be photographed; and, stratigraphic profiles and soil/sediment descriptions would be prepared from exposures. All discovery locations would be documented on scaled site plans and site location maps. Hand tools would be used for collecting radiometric samples directly from site deposits.

i. Any archaeological deposits encountered which require mitigating excavation and/or collection of samples or materials would be conducted in a manner consistent with currently accepted professional methods. It is assumed material suitable for radiometric dating would be part of any attempt at data recovery. Those materials would be collected from provenienced locations within the site deposits. Special attention would be given to charcoal, whole shells, non-mammal bone in

various stratigraphic units. A wide range of samples from different depths and in dispersed locations of the site would be preferred. Samples would be collected in plastic bags and processed for later submittal.

j. Within 30 days of concluding all work, a management summary describing any and all monitoring and resultant archaeological excavations will be provided to the project manager. The project manager will forward the report to the Corps, SHPO, and THPO.

SPECIAL PROCEDURES FOR THE DISCOVERY OF HUMAN SKELETAL MATERIAL

Any human skeletal material -- regardless of ethnic origin -- that may be discovered during this project will at all times be treated with dignity and respect. Any human remains discovered within or associated with the shell midden deposits will be assumed to be of Native American origin. If Native American human remains and/or funerary items are encountered, all treatment will follow mandates of the Revised Codes of Washington (RCW) Chapter 27.44 and the procedures outlined below.

a. During all project operations if City employee or any contractor or subcontractor believes that he or she has made a discovery of human skeletal remains, all work adjacent to the discovery shall cease immediately. The area of work stoppage will be adequate to provide for the total security, protection, and integrity of the human skeletal remains, in accordance with Washington State Law (RCW 27.44 & RCW 68.50.645).

b. In the event of human remains being identified, the City or the senior project representative will immediately call: the Bellingham Police Department; followed by Dr. Guy Tasa, Washington State Physical Anthropologist at SHPO; and, the Corps. The local law enforcement official may arrange for a representative of the county medical examiner's office to assist the SHPO in the examination of the discovery and will together determine whether it should be treated as a crime scene or as another form of human burial. The SHPO holds all authority of determining cultural affinity of archaeological skeletal remains in Washington State.

c. Proper treatment and affiliation determination require at minimum a close examination and documentation of any disturbed burial. Non-intrusive field documentation of all human remains will be undertaken immediately upon discovery. No persons other than the proper law enforcement personnel, professional archaeologists and SHPO authorized persons will be allowed direct access to the discovery location until after the area is secured. If the remains are determined to be of Native American ancestry the affected tribe(s) will be contacted and informed of the situation. The strict control of a burial location is mandated to insure the safety and integrity of the burial feature and remains.

d. Take appropriate steps to protect the discovery site. The immediate area will be secured to a distance adequate to provide for the total security, protection, and integrity of the resource. Vehicles, equipment, and unauthorized personnel will not be permitted to traverse or enter the discovery site.

Works Cited

Adams, C. M.

1922 A Map of the City of Bellingham. On file at the Whatcom County Museum, Catalog Number X.2706.

Amos, Pamela Thorsen

1972 *The Persistence of Aboriginal Beliefs and Practices among the Nooksack Coast Salish*. Ph.D Dissertation in Anthropology, University of Washington.

Bellingham Herald

1936 Bloody War Between Spaniards and Red Men Fought on Harris Bay Near Present Site of P. A. F. Cannery. Published 2 February 1936. Wallis & Marilyn Kimble Northwest History Database, Washington State University. 09.

Bourasaw, Noel V., editor.

2007 "Daniel J. Harris, Original Fairhaven Man: Endnotes" *Skagit River Journal of History & Folklore* Issue 38. March 31, 2007, Sedro-Wooley, Washington.

2008 "Part Two: Fairhaven & Southern —
the metal meets the road" *Skagit River Journal of History & Folklore. Online Document. Accessed September 20, 2012. http://www.skagitriverjournal.com/RR/Sk-What/F-S02-Decline.html*

Boxberger, Daniel

1986 Resource Allocation and Control on the Lummi Indian Reservation: A Century of Conflict and Change in the Salmon Fishery. PhD dissertation, Department of Anthropology/Sociology, University of British Columbia, Vancouver

Booth, D.B. and B. Goldstein

1994 *Patterns and Processes of Landscape Development by the Puget Lobe Ice Sheet*. Regional Geology of Washington State: Washington Division of Geology and Earth Resources, Bulletin 80: 227.

Borden, Charles

1950 Preliminary Report on Archaeological Investigations in the Fraser River Delta Region. *Anthropology in British Columbia*, 4:26-32.

1968 Prehistory of the Lower Mainland. In *Lower Fraser Valley: Evolution of a Cultural Landscape*, edited by A.H. Siemens. British Geographical Series 9:9-26.

1970 Culture History of the Fraser Delta Region: An Outline. *B.C. Studies* 6, 7:95-112.

Bush, Kelly and Jacquelyn C. Ferry

2005 State of Washington Archaeological Site Inventory Form for 45WH47. On File at the Department of Archaeology and Historic Preservation, Olympia, Washington.

2006 Archaeological Investigation Report: Harris and 15th Streets, Fairhaven, Bellingham, Washington. Prepared for Zervas Group Architects. Prepared by Equinox Research and Consulting International, Inc., Concrete, Washington.

Campbell, A. R.

1889 Guide Map of Sehome & Vicinity, Washington. W. A. Stewart & Co., Real Estate Brokers, Sehome, Washington.

City of Bellingham

2008 Padden Creek Habitat Restoration. http://www.cob.org/services/environment/restoration/padden-creek.aspx Accessed 06/24/09.

Clague, John J. and Thomas S. James

2002 History and Isostatic Effects of the Last Ice Sheet in Southern British Columbia. Quaternary Science Reviews 21:71-87.

Croes, Dale R., Mary K. Albright, and Angelina de Bellis

1996 Cultural Resource Report, Nooksack Salmon Enhancement Association/Nooksack Basin Recovery, Phase III Project, Whatcom County, Washington. Prepared for US Fish and Wildlife Service Region 1, Portland, Oregon.

Dugas, Amy E. and Lynn L. Larson

1999 Bellingham Bay Demonstration Pilot Project, Whatcom County Cultural Resource Overview. Prepared for Anchor Environmental, L.L.C., Seattle, Washington. Prepared by Larson Anthropological Archaeological Services Limited, Gig Harbor, Washington.

Easterbrook, Don J.

2003 Cordilleran Ice Sheet Glaciation of the Puget Lowland and Columbia Plateau and Alpine Glaciation of the North Cascade Range, Washington. In Western Cordillera and Adjacent Areas, ed. T. W. Swanson, pp. 137-157. Geological Society of America, Boulder, Colorado.

Edson, Lelah Jackson

1968 The Fourth Corner, Highlights from the Early Northwest. Whatcom Museum of History and Art, Bellingham, WA.

Franklin, J.F. and C.T. Dyrness

1973 Natural Vegetation of Oregon and Washington. USDA Forest Service General Technical Report PNW-8, Portland, Oregon

Gerhard, George M.

1907 The Sewerage System of the City Of Bellingham. Pacific Northwest Society of Engineers. Proceedings Vol. 6 No 4 December 1907. Pg. 6-17

Goldin, Alan

1992 Soil Survey of Whatcom County Area, Washington. United States Department of Agriculture, Soil Conservation Service, in cooperation with Washington State Department of Natural Resources and Washington State University, Agriculture Research Center, Washington D.C.

Grabert, G. F.

1974 Western Washington State College Archaeological Field Forms Site Survey Form for 45WH50. On file at the Department of Archaeology and Historic Preservation, Olympia, Washington.

1975 Western Washington State College Archaeological Field Forms Site Survey Form for 45WH60. On file at the Department of Archaeology and Historic Preservation, Olympia, Washington.

Hawley, Robert Emmett

1945 *Skquee Mus or Pioneer Days on the Nooksack*. Miller and Sutherlen, Bellingham.

Hinks, Edmund S.

1890 Whitney's Map of the Bellingham Bay Cities and Environs, Whatcom County, Washington. Parker & Wilkeson, Real Estate Brokers, Fairhaven, Washington. On File at the Whatcom County Museum.

1892 Map of Fairhaven and Vicinity, Washington. On File at the Whatcom County Museum, Catalog Number 1995.22.1.

Indian Claims Commission

1974 The Nooksack Tribe of Indians on Relation of Joseph Louis, Chairman of the General Council v. The United States of America. 15 Indian Claims Commission 1, Docket No. 46, Indian Claims Commission, May 9 1955. Reprinted in *Coast Salish and Western Washington Indians V: Commission Findings, Indian Claims Commission*, pp-147-174. American Indian Ethnohistory, Indians of the Northwest, edited by David A. Horr. Garland Publishing, NY.

Jeffcott, Percival R.
1949 Nooksack Tales and Trails. Whatcom County Pioneer Association, Ferndale, Washington.

Kovanen, Dori J., and Don J. Easterbrook
2002 Timing and Extent of the Younger Dryas Age (ca.12,500-10,000 14C yr BP) Oscillations of the Cordilleran Ice Sheet in the Fraser Lowland, Western North America. Quaternary Research 57:208-224.

Lapen, Thomas J.
2000 Geologic Map of the Bellingham 1:100,000 Quadrangle, Washington. Washington Division of Geology and Earth Resources, Open File Report 2000-5.

Lasmanis, Raymond
1991 The Geology of Washington. Rocks and Minerals 66:262-277.

Lippold, Rick
2012 Padden Creek Tunnel Report: Memorandum concerning Padden Creek tunnel inspection to Mary Weber at SAIC Energy, Environment & Infrastructure, LLC. Dated September 10, 2012.

Luttrell, Charles T.
2005 Cultural Resources Investigations of WSDOT's I-5: South Bound Ramps at SR 11 Signalization and Channelization Project, Whatcom County, Washington. Prepared for the Washington State Department of Transportation, Olympia, Washington. Prepared by Archaeological and Historical Services, Pullman, Washington.

Meidinger, Brett, Tamela S. Smart and Julia M. Rowland
2010 Archaeological Monitoring Report: Parcel #: 370201-009026-0000 and 370201-013024-0000, Whatcom County, Washington. Prepared for Karl and Karen Thomas by ERCI. On file at the Department of Archaeology and Historic Preservation, Olympia, Washington.

Mustoe, G.E., R.M. Dillhoff, and T.A. Dillhoff
2007 Geology and Paleontology of the Early Tertiary Chuckanut Formation. In Floods, Faults, and Fire: Geological Field Trips in Washington State and Southwest British Columbia, edited by Pete Stelling and David S. Tucker, pp. 121-136. Geological Society of America, Field Guide 9, Boulder, Colorado.

Oakley, Janet
2005 Whatcom County Thumbnail History. History Link.com

Pflanzer, Jacques

1977 Western Washington State College Archaeological Field Forms Site Survey Form for 45WH78. On file at the Department of Archaeology and Historic Preservation, Olympia, Washington.

Piper, Jessie

2007 Cultural Resource Assessment of I-5/Dakota Creek Vicinity Water Quality Retrofit, Skagit and Whatcom Counties, Washington. Prepared for the Washington State Department of Transportation, Olympia, Washington. Prepared by Northwest Archaeological Associates, Inc., Seattle, Washington.

Pojar, Jim and MacKinnon (editors)

1994 *Plants of the Pacific Northwest Coast*. Lone Pine Publishing, Vancouver British Columbia, Canada.

Potter, Elizabeth Walton

1976 National Register of Historic Places Nomination Form: Fairhaven Historic District. On file at the Department of Archaeology and Historic Preservation, Olympia, WA.

Porter, S. C. and T. W. Swanson

1998 Radiocarbon Age Constraints on Rates of Advance and Retreat of the Puget Lobe of the Cordilleran Ice Sheet during the Last Glaciation. Quaternary Research 50:205-213.

Pullman Herald

1891 *G. N. Railroad Rumors*. October 23, 1891.

Reagan, A.B.

1917 *Archaeological Notes on Western Washington and Adjacent British Columbia*. Proceedings of the California Academy of Sciences, Series Four, Vol. 7, No.1. San Francisco.

Ruby, Robert H., and John A. Brown

1986 *A Guide to the Indian Tribes of the Pacific Northwest*. University of Oklahoma Press, Norman.

Reed, Patrick and Sarah Campbell

2008 State of Washington Archaeological Site Inventory Form for 45WH47. On File at the Department of Archaeology and Historic Preservation, Olympia, Washington.

Reid, Alfred

1987 *An Ecological Perspective of the Intergroup Relations of an Inland Coast Salish Group: The Nooksack People.* Unpublished M.A. thesis, Department of Anthropology, Western Washington University, Bellingham.

Reid, Alfred, Dimity Hammon, and Stacie Nored-Pratschner

2006 Cultural Resource Assessment of the Property at 1314 Old Fairhaven Parkway in Bellingham, Whatcom County, Washington. Prepared for Coldwell Banker Miller-Arnason Real Estate, LLC, Bellingham, Washington. Prepared by Alfred Reid Archaeological Consulting, Ltd., Bellingham, Washington.

Roth, Lottie Roeder, (editor)

1926 *History of Whatcom County Vol. I*. Pioneer Historical Publishing Company. Chicago and Seattle.

Ruby, Robert H. and John A. Brown

1986 A Guide to Indian Tribes of the Pacific Northwest. University of Oklahoma Press, Norman

St. Paul Daily Globe

1891 Fairhaven Bear in Mind. May 17, 1891

1891 *Fairhaven on the Sound: Where Ships and Railways Meet*. Puget Sound Catechism. June 8, 1891.

1891 *Northwestern Terminus*. June 28, 1891.

Scherrer, Wendy

2001 "After 100 Years, Padden Creek May Again See Daylight" Whatcom Watch. Volume 10, Issue 5. May 2001.

Shong, Michael and Christian J. Miss

2005 Cultural Resources Assessment of the Mckenzie Square Apartment Project in the Historic Fairhaven District of Bellingham, Whatcom County, Washington. Prepared for Molnar Group, Vancouver, British Columbia. Prepared by Northwest Archaeological Associates, Inc., Seattle, Washington.

2004 Results of Archaeological Monitoring for the Harris Square Development in the Fairhaven District, Bellingham, Washington. Prepared for 10th & Harris Limited Partnership, Vancouver, British Columbia. Prepared by Northwest Archaeological Associates, Inc., Seattle, Washington.

Smith, Harlan I.

1901 Archaeological Investigations on the North Pacific Coast in 1899. *American Anthropologist* 3: 563-567.

1903 Shell Heaps of the Lower Fraser, British Columbia. *American Museum of Natural History, Memoirs* 3(4). New York.

1907 Archaeology of the Gulf of Georgia and Puget Sound. *American Museum of Natural History Memoir* 4, part 6. New York.

Smith, Harlan I. and Gerald Fowkes

1901 *Cairns of B.C. and Washington.* American Museum of Natural History Memoir 4, part 2. New York.

Smith, Marian

1950 The Nooksack, the Chilliwack, and the Middle Fraser. *Pacific Northwest Quarterly* 41: 330-341

Spear, Robert

1977 *A Prehistoric Site Cluster in Western Whatcom County, Washington.* Unpublished M.A. Thesis, Department of Anthropology, Western Washington University, Bellingham.

Stern, Bernhard J.

1934 The Lummi Indians of northwest Washington. Columbia University Press, New York

Stilson, Lee, Tom Edwards, Kyle Taylor and Al Scott Johnnie

2002 Final Report: Cultural Resource Assessment of the Lake Whatcom Watershed. Prepared for Lake Whatcom Planning Team, Washington State Department of Natural Resources, Lummi Natural Resources Protection, Lummi Nation.

Suttles, Wayne P.

1951 The Economic Life of the Coast Salish of Haro and Rosario Strait. PhD Dissertation in Anthropology, University of Washington, Seattle

1990 Central Coast Salish. In Handbook of North American Indians vol. 7 Northwest Coast, edited by Wayne P. Suttles pp.453-475. Series editor W.C. Sturtevant, Smithsonian Institute, Washington D. C.

Suttles, Wayne P. and Barbara Lane

1990 Northwest Coast, Handbook of North American Indians, Vol. 7, William C. Sturtevant general editor, Smithsonian Institution, Washington, D. C.

Thacker, Ralph

2012 Dan Harris Stakes His Claim: Biographical, Geographical and Legal Details from Daniel J. Harris's Donation Land Claim File and from Government Surveys of His Claim. Series 1: Vol 3. Revised March 30, 2012. Bellingham, WA.

Tremaine, David G.

1975 *Indian and Pioneer Settlement of the Nooksack Lowland, Washington to 1890*. Occasional Paper 4, Center for Pacific Northwest Studies, Western Washington State College, Bellingham.

United States Department of Agriculture – Natural Resource Conservation Service (USDA-NRCS)

2009 Whatcom County Area, Washington, Version 2, Jun 12, 2009. Electronic document, *http://websoilsurvey.nrcs.usda.gov/app/WebSoilSurvey.aspx, accessed June 24, 2009.*

US Surveyor General

1859 General Land Office Plat of Township No. 32 North, Range 2 East, Willamette Meridian. On file with the Bureau of Land Management.

Waitt, Richard B. and Thorson, Robert M.

1983 The Cordilleran Ice Sheet in Washington, Idaho, and Montana. In Late Quaternary Environments of the United States, Volume 1: The Late Pleistocene, edited by S.C. Porter, pp. 53-70. University of Minnesota Press, Minneapolis

Wenden Engineering, LLC

2008 Parkway Gardens Preliminary Site Plan. Wenden Engineering, LLC, Ferndale, Washington.

Wessen, Gary

2005 Washington Archaeological Site Inventory Form for 45WH725. On file at the Department of Archaeology and Historic Preservation, Olympia, Washington.

Whatcom County Assessor

2009 Whatcom County Parcel Database Information System. Online document, accessed June 25, 2009 at *http://www.co.whatcom.wa.us/cgibin/db2www/assessor/search/RPSearch.ndt/disclaimer.*

Whatcom County Natural Resources (WCNR)

n.d. Padden Creek: Watershed of the Month. Water Resource Inventory Area No. 1 (WRIA No. 1) Document by the Whatcom Salmon Recovery. Online archive. Accessed October 31, 2012 at *http://whatcomsalmon.whatcomcounty.org/background/watershed_archive/archive-padden_creek.html*

Appendix A: Geotest and Shovel Probe Data

Geotest Boring Soil Data

BORE 1		
Depth (feet)	**Sediments**	**Cultural Material**
0-12.5	Mottled gray silt loam with some angular fill gravel, disturbed glacial deposits.	Modern yellow and blue plastic fragments.
12.5-15	Gray silt with 5 inches of blue gray sandy silt overlying gray silt, glacial deposits.	No Cultural Material.
15 +	Gray silt clay loam, glacial deposits.	No Cultural Material.
BORE 2		
Depth (feet)	**Sediments**	**Cultural Material**
0-2.5	Dark brown silt overlying brown silt with iron oxides, disturbed topsoil overlying grayish brown intact subsoil.	No Cultural Material.
2.5-5	Grayish brown loam subsoil overlying light gray ashy silt, possible volcanic deposit.	No Cultural Material.
5-7.5	Light gray ashy silt overlying mottled blue gray sandy silt clay, glacial deposits.	No Cultural Material.
7.5 +	Mottled blue gray sandy silt clay, glacial deposits.	No Cultural Material.
BORE 3		
Depth (feet)	**Sediments**	**Cultural Material**
0-2.5	Mottled brown silt loam with gravels and gray silt sand, fill deposits.	No Cultural Material.
2.5-5	Mottled fill overlying dark brown silt topsoil over light brownish gray loam subsoil.	No Cultural Material.
5-7.5	Light brownish gray loam subsoil overlying olive gray silt, glacial deposits.	No Cultural Material.
7.5-10	Olive gray silt overlying mottled blue gray sandy silt clay, glacial deposits.	No Cultural Material.
10-22	Mottled blue gray sandy silt clay, glacial deposits.	No Cultural Material.
22+	Sandstone bedrock	No Cultural Material.
BORE 4		
Depth (feet)	**Sediments**	**Cultural Material**
0-2.5	Mottled brown silt loam with gravels and light brown silt sand, fill deposits overlying dark grayish brown disturbed topsoil.	Tiny fragments of terra cotta brick
2.5-5	Dark grayish brown silt loam overlying mottled light brownish gray and grayish brown silt disturbed subsoil.	No Cultural Material.
5-7.5	Olive gray silt subsoil grading into gravelly blue gray sandy silt, glacial deposits.	No Cultural Material.
7.5-10+	Gravelly blue gray sandy silt, glacial deposits.	No Cultural Material.

BORE 5		
Depth (feet)	**Sediments**	**Cultural Material**
0-2.5	Mottled dark brown silt loam with gravels and gray brown silt loam, fill and disturbed topsoil.	No Cultural Material.
2.5-5	Grayish brown silt, intact glacial deposits.	No Cultural Material.
5-7.5	Gray brown silt grading into olive gray silt, intact glacial deposits.	No Cultural Material.
7.5-10	Olive gray silt grading into gravelly blue gray sandy silt, intact glacial deposits.	No Cultural Material.
BORE 6		
Depth (feet)	**Sediments**	**Cultural Material**
0-2.5	Mottled gray silt loam with some angular fill gravel, yellow brown silt loam, fill deposits overlying dark brown silt loam topsoil deposits, directly overlying blue gray sandy silt, glacial deposits.	No Cultural Material.
2.5-5+	Blue gray sandy silt, glacial deposits.	No Cultural Material.
BORE 7		
Depth (feet)	**Sediments**	**Cultural Material**
0-7.5	Brown compact silt loam with gravels, mottled pockets of olive brown silt sand, bluish-gray clay, gray silt sand and gravel, and dark brown loam.	No Cultural Material.
7.5-10	Brown compact silt loam with gravels, mottled pockets of olive brown silt sand, bluish-gray clay, gray silt sand and gravel, and dark brown loam overlying blue gray clay with wood fragments, glacial deposits.	No Cultural Material.
10+	Blue gray clay with wood fragments, glacial deposits.	No Cultural Material.

Geotest Trench Soil Data

Trench 1		
Depth (cm)	**Sediments**	**Cultural Material**
0-60	Dark brown silt loam, disturbed topsoil.	Metal fence post, windowpane glass and charcoal.
60-85	Light brownish gray silt loam, partially disturbed subsoil.	No Cultural Material.
85-360	Grayish brown silt loam, intact substratum.	No Cultural Material.
360-435	Olive gray silt, intact glacial deposits.	No Cultural Material.
435-480	Gravelly blue gray sandy silt, glacial deposits.	No Cultural Material.
Trench 2		
Depth (cm)	**Sediments**	**Cultural Material**
0-35	Dark grayish brown disturbed topsoil.	No Cultural Material.
35-240	Grayish brown silt loam, disturbed subsoil.	Terra cotta drain pipe in side wall at 240 cm
240-495	Light olive gray silt with iron oxides, intact glacial deposits.	No Cultural Material.
495-555	Gravelly blue gray sandy silt few cobbles with depth, intact glacial deposits.	No Cultural Material.
Trench 3		
Depth (cm)	**Sediments**	**Cultural Material**
0-130	Mottled dark brown and brown silt clay with iron oxides, disturbed topsoil and glacial deposits.	Plastic, concrete, brick fragments.
130-155	Gray sand contaminated chemical smell	No Cultural Material.
155-180	Grayish brown silt	No Cultural Material.
72-240	Light gray ashy silt, possible volcanic ash.	No Cultural Material.
240-540	Gravelly blue gray sandy silt few cobbles with depth, intact glacial deposits.	No Cultural Material.

Shovel Probe Soil Data

Shovel Probe 1		
CM Depth	**Sediments**	**Cultural Material**
0-10	Sod root zone, mottled brown sandy silt with clay inclusions and gravel, fill deposits.	Fill with miscellaneous woody debris.
10-112	Mottled brown compact sandy silt with clay inclusions and gravel, fill deposits.	No cultural material.
Shovel Probe 2		
CM Depth	**Sediments**	**Cultural Material**
0-19	Sod root zone, mottled brown sandy silt with clay inclusions and gravel, fill deposits.	No cultural material.
19-48	Mottled brown compact sandy silt with clay inclusions and gravel, fill deposits.	No cultural material.
48-51	Light gray silt sand with 10% rounded gravel, fill deposits.	No cultural material.
51-74	Mottled brown compact sandy silt with clay inclusions and gravel, fill deposits.	No cultural material.
74-105	Dark brown sandy silt with clay inclusions, fill deposits.	No cultural material.
Shovel Probe 3		
CM Depth	**Sediments**	**Cultural Material**
0-13	Sod root zone, mottled brown sandy silt with clay inclusions and gravel, fill deposits.	Four feet of fill with some miscellaneous wood fragments.
13-102	Mottled brown compact sandy silt with clay inclusions and gravel, fill deposits.	No cultural material.
Shovel Probe 4		
CM Depth	**Sediments**	**Cultural Material**
0-26	Mottled brown silt loam with gray silt pockets and many large roots, fill deposits.	Round nail.
26-40	Brown silt sand with ~5% pea gravel, fill deposits.	No cultural material.
40-80	Mottled olive brown silt sand with no gravel, fill deposits.	No cultural material.
Shovel Probe 5		
CM Depth	**Sediments**	**Cultural Material**
0-55	Dark brown silt loam, disturbed topsoil.	Old disconnected copper waterline, windowpane glass.
60-86	Light brownish gray silt loam, partially disturbed subsoil.	No cultural material.
86-95	Grayish brown silt loam, intact substratum.	No cultural material.
Shovel Probe 6		
CM Depth	**Sediments**	**Cultural Material**
0-72	Dark brown silt loam, disturbed topsoil.	Brick fragments, fiberglass, sheet metal
SP terminated by sheet metal at base.		

Shovel Probe 7		
CM Depth	**Sediments**	**Cultural Material**
0-45	Dark brown silt loam and angular gravel, disturbed topsoil.	Clear bottle glass fragment.
45-78	Light brownish gray silt loam, intact subsoil	No cultural material.
78-86	Grayish brown silt loam, intact substratum.	No cultural material.
Shovel Probe 8		
CM Depth	**Sediments**	**Cultural Material**
0-25	Mottled dark brown silt loam and grayish brown loam, displaced native soil as fill deposit.	No cultural material.
25-41	Dark brown silt loam, partially disturbed topsoil.	No cultural material.
41-73	Light brownish gray silt loam, intact subsoil.	No cultural material.
73-80	Grayish brown silt loam, intact glacial deposits.	No cultural material.
Note: Upper 25 cm likely displaced from e/w drainage ditch 3 m to north of SP.		
Shovel Probe 9		
CM Depth	**Sediments**	**Cultural Material**
0-30	Mottled compact dark brown silt loam and grayish brown loam with few angular gravels, fill deposit.	Clear bottle glass, corroded metal.
30-37	Dark brown silt loam, partially disturbed topsoil.	Clear bottle glass, metal nail.
37-67	Light brownish gray silt loam, intact subsoil.	No cultural material.
67-75	Grayish brown silt loam, intact glacial deposits.	No cultural material.
Note: Upper 30 cm likely displaced from e/w drainage ditch 2 m to north of SP.		
Shovel Probe 10		
CM Depth	**Sediments**	**Cultural Material**
0-41	Mottled very densely compact brown silt loam with gravels and gray silt loam with angular gravel, fill deposits.	Terra cotta brick fragment, brown bottle glass.
41-70	Light brownish gray silt loam, intact subsoil.	No cultural material.
70-77	Grayish brown silt loam, intact glacial deposits.	No cultural material.
Note: Located directly south of 21st Street, likely extension of 21st or east to west road grade.		
Shovel Probe 11		
CM Depth	**Sediments**	**Cultural Material**
0-35	Mottled compact brown silt loam with gravels and gray silt loam with angular gravel, fill deposits.	No cultural material.
35-66	Light brownish gray silt loam, intact subsoil.	No cultural material.
66-75	Grayish brown silt loam, intact glacial deposits.	No cultural material.
Note: Located within old roadway grade, compact fill, no topsoil, graded subsoil.		
Shovel Probe 12		
CM Depth	**Sediments**	**Cultural Material**
0-49	Mottled very compact brown silt loam with gravels and gray silt loam with angular gravel, fill deposits.	No cultural material.
49-53	Dark brown silt loam, very thin intact topsoil.	
53-65	Light brownish gray silt loam, intact subsoil.	No cultural material.
65-72	Grayish brown silt loam, intact glacial deposits.	No cultural material.
Note: Located within old roadway grade.		

Shovel Probe 13		
CM Depth	**Sediments**	**Cultural Material**
0-45	Mottled compact brown silt loam with gravels and gray silt loam with angular gravel, fill deposits.	No cultural material.
45-68	Light brownish gray silt loam, intact subsoil.	No cultural material.
68-75	Grayish brown silt loam, intact glacial deposits.	No cultural material.
Note: Located at edge of old roadway grade, compact fill, no topsoil, graded subsoil.		
Shovel Probe 14		
CM Depth	**Sediments**	**Cultural Material**
0-30	Sod root zone, mottles brown silt loam, fill mixed with partially disturbed topsoil deposit.	Modern sheet plastic.
30-42	Dark brown silt loam, intact topsoil.	No cultural material.
42-55	Light brownish gray silt loam, intact subsoil.	No cultural material.
55-65	Grayish brown silt loam, intact glacial deposits.	No cultural material.
Shovel Probe 15		
CM Depth	**Sediments**	**Cultural Material**
0-37	Sod root zone, mottles brown silt loam, fill mixed with partially disturbed topsoil deposit.	No cultural material.
37-66	Dark brown silt loam, intact topsoil.	No cultural material.
66-73	Light brownish gray silt loam, intact subsoil.	No cultural material.
Shovel Probe 16		
CM Depth	**Sediments**	**Cultural Material**
0-55	Mottled dark brown and brown silt clay with iron oxides, disturbed topsoil deposits.	No cultural material.
55-71	Brown silt clay with iron oxides, partially disturbed grading into intact subsoil deposit.	No cultural material.
71-92	Gray silt, intact glacial deposit.	No cultural material.
Shovel Probe 17		
CM Depth	**Sediments**	**Cultural Material**
0-15	Sod root zone, mottled brown sandy silt with clay inclusions and gravel, fill deposits.	No cultural material.
15-75	Mottled gray silt loam and brown silt loam with clay inclusions and gravel, disturbed glacial deposits overlying intact glacial deposits.	No cultural material.
Shovel Probe 18		
CM Depth	**Sediments**	**Cultural Material**
0-13	Dark brown silt loam with some angular fill gravel, disturbed topsoil.	No cultural material.
13-67	Mottled gray silt loam, disturbed glacial deposits overlying intact glacial deposits.	No cultural material.
Shovel Probe 19		
CM Depth	**Sediments**	**Cultural Material**
0-30	Sod root zone, mottles brown silt loam, fill mixed with partially disturbed topsoil deposit.	No cultural material.
30-42	Dark brown silt loam, intact topsoil.	No cultural material.
42-75	Light brownish gray silt loam, intact subsoil.	No cultural material.

Shovel Probe 20		
CM Depth	**Sediments**	**Cultural Material**
0-27	Mottled compact brown silt loam with gravels and gray silt loam with angular gravel, fill possibly from digging drainage ditch, fill deposits.	No cultural material.
27-70	Light brownish gray silt loam, intact subsoil.	No cultural material.
Note: Compact fill, no topsoil, graded subsoil, old roadway.		
Shovel Probe 21		
CM Depth	**Sediments**	**Cultural Material**
0-43	Mottled brown silt loam with gravels and gray silt loam with angular gravel, fill deposits.	No Cultural Material.
43-47	Dark brown silt loam, very thin, intact topsoil.	No Cultural Material.
47-63	Light brownish gray silt loam, intact subsoil.	No Cultural Material.
63-75	Grayish brown silt loam, intact glacial deposits.	No Cultural Material.
Note: Located north of drainage ditch.		
Shovel Probe 22		
CM Depth	**Sediments**	**Cultural Material**
0-27	Dark brown silt loam and angular gravel, disturbed topsoil.	No Cultural Material.
27-85	Light brownish gray silt loam, intact subsoil	No Cultural Material.
85-92	Grayish brown silt loam, intact substratum.	No Cultural Material.
Shovel Probe 23		
CM Depth	**Sediments**	**Cultural Material**
0-44	Dark brown silt loam and angular gravel, disturbed topsoil.	No Cultural Material.
44-78	Light brownish gray silt loam, intact subsoil	No Cultural Material.
78-85	Grayish brown silt loam, intact substratum.	No Cultural Material.
Shovel Probe 24		
CM Depth	**Sediments**	**Cultural Material**
0-60	Dark brown silt loam, some slumping, disturbed topsoil.	No Cultural Material.
60-86	Light brownish gray silt loam, partially disturbed subsoil.	No Cultural Material.
86-90	Grayish brown silt loam, intact substratum.	No Cultural Material.
Note: Cutbank profile of steep approximately 3 ft deep drainage ditch.		
Shovel Probe 25		
CM Depth	**Sediments**	**Cultural Material**
0-54	Dark brown silt loam, some slumping, disturbed topsoil.	Modern brown bottle glass.
54-83	Light brownish gray silt loam, partially disturbed subsoil.	No Cultural Material.
83-87	Grayish brown silt loam, intact substratum.	No Cultural Material.
Note: Cutbank profile of steep approximately 3 ft deep drainage ditch.		
Shovel Probe 26		
CM Depth	**Sediments**	**Cultural Material**
0-67	Mottled gray silt loam with some angular gravel, fill deposits.	No Cultural Material.
67-75	Gray silt clay, graded glacial deposits.	No Cultural Material.
Note: Topsoil completely absent.		

Shovel Probe 27		
CM Depth	**Sediments**	**Cultural Material**
0-39	Mottled gray silt loam with some angular gravel, fill deposits.	No Cultural Material.
39-45	Dark grayish brown silt loam partially disturbed very thin.	No Cultural Material.
45-70	Gray silt clay, intact glacial deposits.	No Cultural Material.
Shovel Probe 28		
CM Depth	**Sediments**	**Cultural Material**
0-41	Mottled brown and grayish brown sandy silt with clay inclusions and gravel, fill deposits.	No Cultural Material.
41-47	Dark grayish brown silt loam, partially disturbed very thin topsoil deposit..	Corroded metal nail.
47-82	Mottled gray silt and some angular gravel, disturbed grading into intact glacial deposits.	Brown bottle glass within upper 5 cm or at interface with topsoil.
Shovel Probe 29		
CM Depth	**Sediments**	**Cultural Material**
0-46	Mottled dark brown and grayish brown silt loam, intact topsoil, disturbed and slumping topsoil.	No Cultural Material.
46-73	Dark grayish brown silt loam, upper 5 cm disturbed topsoil.	No Cultural Material.
73-111	Gray silt with iron oxides, intact glacial deposits.	No Cultural Material.
Note: Cutbank profile.		
Shovel Probe 30		
CM Depth	**Sediments**	**Cultural Material**
0-29	Dark grayish brown some angular gravels, partially disturbed topsoil.	Concrete fragment.
29-85	Grayish brown silt loam, intact subsoil.	No Cultural Material.
Shovel Probe 31		
CM Depth	**Sediments**	**Cultural Material**
0-32	Dark grayish brown some angular gravels, partially disturbed topsoil.	No Cultural Material.
32-35	Grayish brown silt loam, intact subsoil.	No Cultural Material.
Note: Hit water table at soil interface, terminated SP.		
Shovel Probe 32		
CM Depth	**Sediments**	**Cultural Material**
0-35	Dark grayish brown some angular gravels, partially disturbed topsoil.	No Cultural Material.
35-42	Grayish brown silt loam, intact subsoil.	No Cultural Material.
Note: Hit water table at soil interface, terminated SP.		

Appendix B: Historic Property Inventory Form for the Happy Valley Tunnel System

Historic Inventory Report

Location

Field Site No. **DAHP No.**

Historic Name: Happy Valley Tunnel System

Common Name:

Property Address: 0000 Old Fairhaven Parkway, Bellingham, WA

Comments:

Tax No./Parcel No.

Plat/Block/Lot

Acreage

Supplemental Map(s)

Township/Range/EW	Section	1/4 Sec	1/4 1/4 Sec	County	Quadrangle
T37R02E	12	NE	NE	Whatcom	BELLINGHAM SOUTH

Coordinate Reference

Easting: 1160144

Northing: 1239812

Projection: Washington State Plane South

Datum: HARN (feet)

Identification

Survey Name: Padden Creek Daylighted Channel Project **Date Recorded:** 09/18/2012

Field Recorder: Brett Meidinger

Owner's Name: City of Bellingham

Owner Address: 2221 Pacific Street

City: Bellingham **State:** Washington **Zip:** 98229

Classification: Structure

Resource Status: **Comments:**

Survey/Inventory

Within a District? No

Contributing? No

National Register:

Local District:

National Register District/Thematic Nomination Name:

Eligibility Status: Not Determined - SHPO

Determination Date: 1/1/0001

Determination Comments:

Historic Inventory Report

Description

Historic Use: Government - Public Works
Current Use: Government - Public Works
Plan: None
Stories: 0
Structural System: Mixed
Changes to Plan: Unknown
Changes to Interior: Not Applicable
Changes to Original Cladding: Not Applicable
Changes to Windows: Not Applicable
Changes to Other: Not Applicable
Other (specify):

Style:	Cladding:	Roof Type:	Roof Material:
None	None	None	None

Foundation:	Form/Type:
None	None

Narrative

Study Unit
Science and Engineering
Community Planning/Development

Other

Date of Construction: 1960 Remodel
1892 Built Date

Builder: Fairhaven City Council

Engineer: Benezette Williams (Design Engineer); J.J. Donovan (Chief Engineer, Fairhaven & Southern Railroad); George Gerhard (Civil Engineer, City of Fairhaven)

Architect:

Property appears to meet criteria for the National Register of Historic Places: Yes

Property is located in a potential historic district (National and/or local): Unable to Determine

Property potentially contributes to a historic district (National and/or local): No

Statement of Significance: The Happy Valley Tunnel System was constructed between 1891 and 1892 to reroute 2,696 feet of Padden Creek underground in anticipation of the Great Northern Railroad, which was proposed to end at Fairhaven. Rerouting the creek facilitated wetland draining in the lower valley, and carrying both drainage and sewage from surrounding land and homes. It is thought to be one of the earliest public storm-water systems in Bellingham.

The Happy Valley Tunnel System is considered eligible for listing on the NRHP under Criteria A, C and D. Criteria A for its association with the development and early infrastructure of the Fairhaven neighborhood and the greater city of Bellingham. Criteria C, as a good example of a nineteenth century brick lined tunnel. And, under Criteria D for the potential to yield additional information for understanding the tunnel system and its related support structures.

Description of Physical Appearance:

The Happy Valley Tunnel System reroutes 2,696 feet of Padden Creek from roughly 22nd Street at Old Fairhaven Parkway to Fairhaven Park near 17th Street in the Happy Valley neighborhood of Fairhaven in Bellingham.

Padden Creek enters the Happy Valley Tunnel System approximately 164-feet southeast of 22nd Street at the upstream headwall. The upstream headwall is a 6-foot tall poured concrete facing with angled wing walls and a metal grate that covers the tunnel opening. On the south wing wall, is a 6-inch diameter mortared concrete outfall pipe and a small section of the poured concrete has been repaired with stacked cast-in-place concrete bags that reach at least 10 courses high. At the north wing wall, a retaining wall extends southeasterly for an undetermined distance following the north side of the creek channel. The retaining wall is flat faced and characterized by its brick and mortared lining, measuring approximately 6 feet high and 1 foot thick. The base of the retaining wall is undercut by erosion in some areas along the creek waterline. The upstream headwall was reportedly upgraded sometime in the 1960s.

From the upstream headwall, Padden Creek is diverted into a tunnel. The tunnel is comprised of an approximately 250-foot long 5-foot diameter poured concrete culvert pipe at the entrance and exit of the system. In other locations, the tunnel is egg shaped, measuring 6-foot high by 4-foot wide, and is characterized by a 0.5-inch thick mortared brick lining. The tunnel has a notched base ranging from 4- to 5 -inches wide and from 3- to 6-inches deep.

At the southeast corner of Happy Court and 22nd Street, Padden Creek is diverted beneath a culvert. The L-shaped culvert is comprised of three pipes that are flat faced and partially buried within an east to west oriented drainage ditch along the north side of a remnant Happy Court road alignment (see HPI). Two of the pipes measure 2-feet in diameter and drain east; and, the third pipe measures 1-foot in diameter and drains south. The headwall measures 2-feet in height and is 14-inches thick. The east face of the culvert headwall measures 9-feet in length and the south side wing wall measures 3-foot 7-inches. There was likely once a wing wall along the north side, however it has either been removed or has been buried due to slumping. The east wall of the culvert is covered by red brick facing with each brick measuring 3.5- by 8.5-inches being stacked at least 5 courses high.

From the culvert, an approximately 10-foot wide by 2-foot deep earthen drainage ditch extends east to west along the north side of a former remnant of Happy Court Road. The ditch is present for approximately 350-feet until it disappears near the intersection of the remnant 21st Street road alignment, likely draining into a buried culvert. The ditch intermittently continues west for another 150-feet, although more shallow and less defined, until it ends at a north to south oriented drainage ditch near the intersection with 20th Street.

Padden Creek exits the Happy Valley Tunnel System at the downstream headwall located at Fairhaven Park approximately 100-feet southwest of 17th Street. The downstream headwall is an approximately 6.5-foot tall concrete arch facing with angled wing walls. To the east is the abandoned creek channel. Here retaining walls extend for approximately 300-feet and along the north and south sides of channel bed. The retaining walls are sloped and constructed of stacked cast-in-place concrete bags. The retaining walls vary from 5- to 6-feet in height. The concrete reinforcement along the channel bed floor is sloped and overlaps as it follows the creek downstream and measures approximately 10-feet wide.

Major Bibliographic References:

Gerhard, George M.
1907 The Sewerage System of the City Of Bellingham. Pacific Northwest Society of Engineers. Proceedings Vol. 6, No 4: 6-17.

Lippold, Rick
2012 Padden Creek Tunnel Report: Memorandum Concerning Padden Creek Tunnel Inspection to Mary Weber at SAIC Energy, Environment & Infrastructure, LLC.

Photos

The upstream headwall and retaining wall, view southwest.
2012

The upstream headwall, view southwest.
2012

Note undercutting by erosion in some areas along the creek waterline.
The base of the upstream retaining wall, view northeast.
2012

The tunnel interior.
2012

The culvert headwall located within an earthen drainage, view southeast.
2012

Downstream headwall, view northeast.
2012

Downstream headwall, view northeast.
2012

Downstream retaining wall, view west.
2012

Appendix C: Archaeological Site Inventory Form 0712A-Temp1 (Historic Road).

STATE OF WASHINGTON
ARCHAEOLOGICAL SITE INVENTORY FORM

Smithsonian No.:

***County:** Whatcom

***Date:** November 17, 2012 ***Compiler:** Brett N. Meidinger **Human Remains?** No

Location Information Restrictions *(Yes/No/Unknown)***:** No **DAHP Case No.:**

SITE DESIGNATION

Site Name: Historic Happy Court Road

Field/ Temporary ID: 0712A-Temp1

Site Type(s)** *(Refer to the DAHP Survey and Inventory Guidelines Page 19):** Historic Road

SITE LOCATION

***USGS Quad Map Name(s):** Bellingham South

***Legal Description: T**37N **R** 2 **E/W:** E **Section(s):** 12

Quarter Section(s): N1/2 of the NE1/4 of the NE1/4

UTM: Zone 10 **Easting** west end 537463 E, east end 537585 E

Northing west end 5396039 N, east end 5396039 N

Latitude: west end 48°42'58.5, east end 48°42'58.5 **Longitude:** west end 122°29'26.5, east end 122°29'20.5 **Elevation (ft/m):** ~107 ft/33m

Other Maps: yes **Type:** Metsker, Plat

Scale: NA **Source:** Whatcom County Tax Accessor, City of Bellingham

Drainage, Major: Boundary Bay **Drainage, Minor:** Padden Creek **River Mile:**

Aspect: northwest **Slope:** gentle

Location Description** *(General to Specific):** The Historic Happy Court Road is located in south Bellingham within the historic Fairhaven neighborhood, Whatcom County. It is situated one mile upstream from Boundary Bay within the Padden Creek floodplain and extends east to west between 22nd Street and the dead end of 21st Street.

Directions** *(For Relocation Purposes):** From I-5 take exit 250 proceed west on Old Fairhaven Parkway (SR-11) for .65 miles to the intersection with 22nd Street. Continue north on 22nd for 175 ft until the intersection with Happy Court is encountered. Cross to the west side of 22nd Street and proceed along the gravel driveway along the remnant Happy Court Road.

SITE DESCRIPTION

Narrative Description** *(Overall Site Observations):** The 25 foot wide Historic Happy Court Road corridor extends east to west for 400 feet from the 22nd Street to the current dead-end of 21st. The road was built sometime between 1889 and 1890 and first appears on a 1890 map of Fairhaven (Hinks 1890). The road does not appear on the 1889 Fairhaven guide map that shows the Fairhaven and Southern Railroad grade (Campbell 1889). The timing of the roads construction during Fairhaven's speculative real estate boom 1889-1891 indicates the road is associated with residential and commercial development and was built for accessing the properties along Happy Court.

Site Dimensions** *(Overall Site Dimensions):**

*__Length:__ 400ft *__Direction:__ W/E *__Width:__ 25ft *__Direction:__ N/S

*__Method of Horizontal Measurement:__ scale on city maps

*__Depth:__ on surface * __Method of Vertical Measurement:__ approximation

Vegetation** *(On Site):** Trees, shrubs, residential lawn

Local: Western red cedar, hemlock forest with understory **Regional:** Western hemlock zone

Landforms *(On Site)***:** floodplain

Local: glacial upland

Water Resources *(Type)***:** Bay **Distance:** 1 mile **Permanence:** permanent

CULTURAL MATERIALS AND FEATURES

Narrative Description** *(Specific Inventory Details):** The historic Happy Court road area includes only the road alignment measuring approximately 400 feet by 25 ft wide. Three shovel tests dug within the historic road corridor indicate the road was graded and built up with fill and eventually topped with gravel, but it was never paved.

There is a brick culvert located at the intersection of Happy Court and 22nd Street within a drainage ditch that parallels the north side of Happy Court road. While the drainage ditch does currently function to drain the historic road it was constructed in 1892 several years after the road. The culvert and drainage ditch were built as part of the city's sewer and storm water system that buried Padden Creek underground within a tunnel in order to drain the Happy Valley neighborhood. The culvert and drainage ditch were therefore recorded separately from the Happy Court site as features and contributing elements of the Happy Valley tunnel system historic property.

Research at did not yield any additional information regarding the purpose of the road. However, The timing of its construction during Fairhaven's speculative real estate boom indicates it was likely associated with commercial and residential development and therefore served as an access route to the properties along Happy Court and the road is not associated with the earlier F & S railroad. Slight to moderate impacts have occurred to the road from the installation of the Happy Valley tunnel system and modern utility lines.

***Method of Collection:** nothing collected

Location of Artifacts** *(Temporary/Permanent):** NA

SITE AGE

Component:** Historic ***Dates** *(Overall Site Age Approximation):** 1889-1890

***Dating Method:** city plat and guide maps **Phase:** **Basis for Phase Designation:**

(Only those historic sites that meet the minimum National Register (36CFR60) age threshold (50 years of age or older) will be retained as historic archaeological records and assigned Smithsonian Trinomials by DAHP.)

SITE RECORDERS

Observed by: Brett Meidinger **Address:** P.O. Box 5424 Bellingham, WA 98227

***Date Recorded:** September 18, 2012

Recorded by** *(Professional Archaeologist):** Brett Meidinger

***Organization:** DAR ***Organization Phone Number:** 360.739.3921

***Organization Address:** P.O. Box 5424 Bellingham, WA 98227

***Organization E-mail:** brett@draytonarcheology.com

Date Revisited: **Revisited By:**

SITE HISTORY

Previous Archaeological Work** *(Done at Site):**

Garth L. Baldwin and Brett N. Meidinger
2012 Cultural Resources Assessment of the Proposed Padden Creek Daylighted Channel Project, Bellingham, Whatcom County, Washington. Prepared by Drayton Archaeological Research for SAIC Energy, Environment & Infrastructure, LLC.

LAND OWNERSHIP

***Owner:** City of Bellingham

***Address:** none

***Tax Lot/ Parcel No:** originally part of Tax Parcel # 370212346507 Now part of SR-11 Right of Way

RESEARCH REFERENCES

Items/Documents Used In Research** *(Specify):**

Adams, C. M.
1922 A Map of the City of Bellingham. On file at the Whatcom County Museum, Catalog Number X.2706.

Campbell, A. R.
1889 Guide Map of Sehome & Vicinity, Washington. W. A. Stewart & Co., Real Estate Brokers, Sehome, Washington.

Hinks, Edmund S.
1890 Whitney's Map of the Bellingham Bay Cities and Environs, Whatcom Co., WA. Parker & Wilkeson, Real Estate Brokers, Fairhaven, WA. On File at the Whatcom Co. Museum.

Whatcom County Assessor
2009 Whatcom County Parcel Database Information System. Online document, accessed

June 25, 2009 at *http://www.co.whatcom.wa.us/cgibin/db2www/assessor/search/RPSearch.ndt/disclaimer*

USGS MAP

*__Quad Name(s):__ Bellingham South

__*Series:__ 7.5 minute

__*Date(s):__ 1989

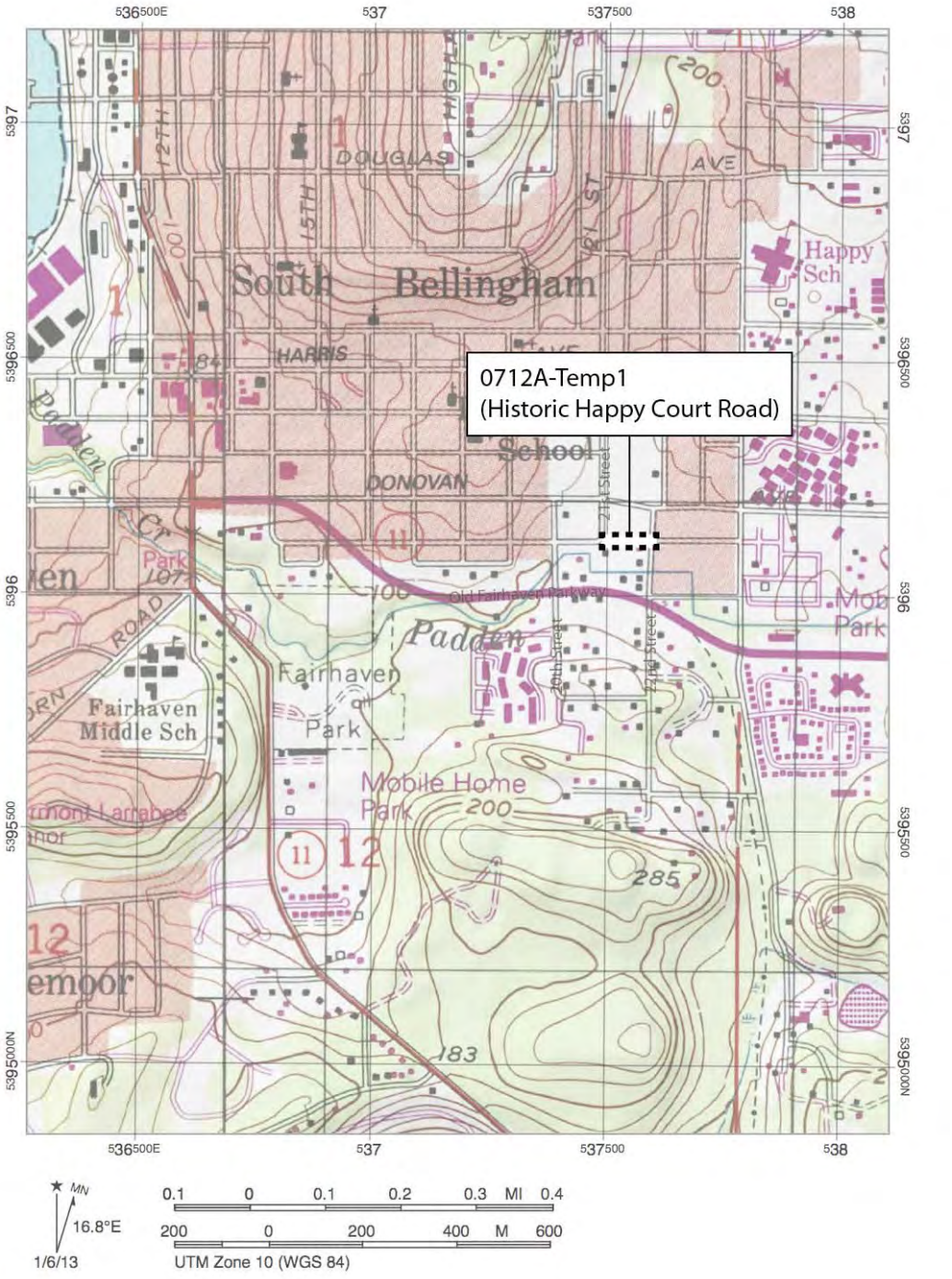

SKETCH MAP

***Sketch Map Description:** Design plan map illustrating the location of 0712A-Temp 1 (Historic Happy Court Road) site boundary (*Map courtesy of* GeoEngineers Inc.).

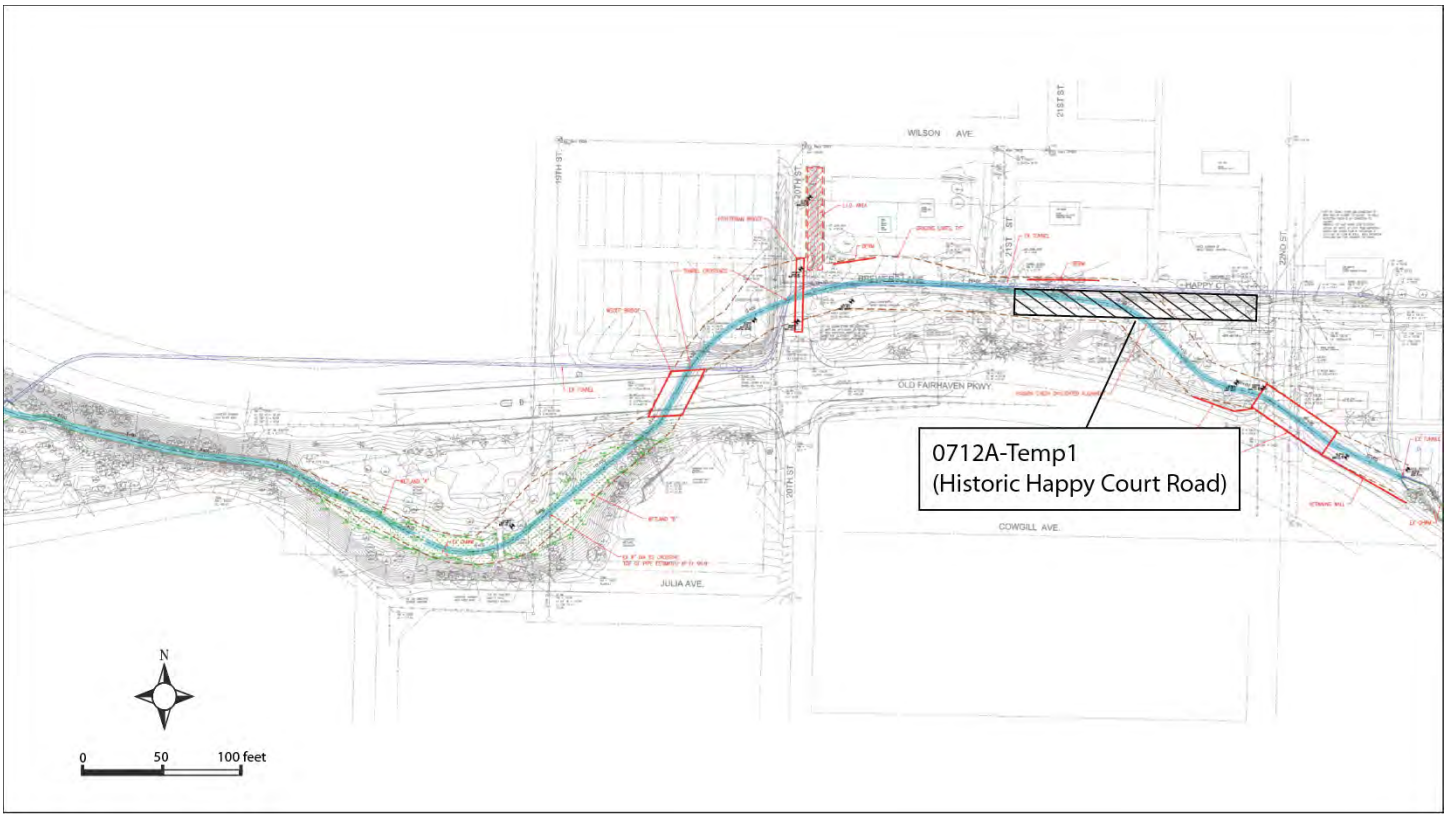

PHOTOGRAPH(S)

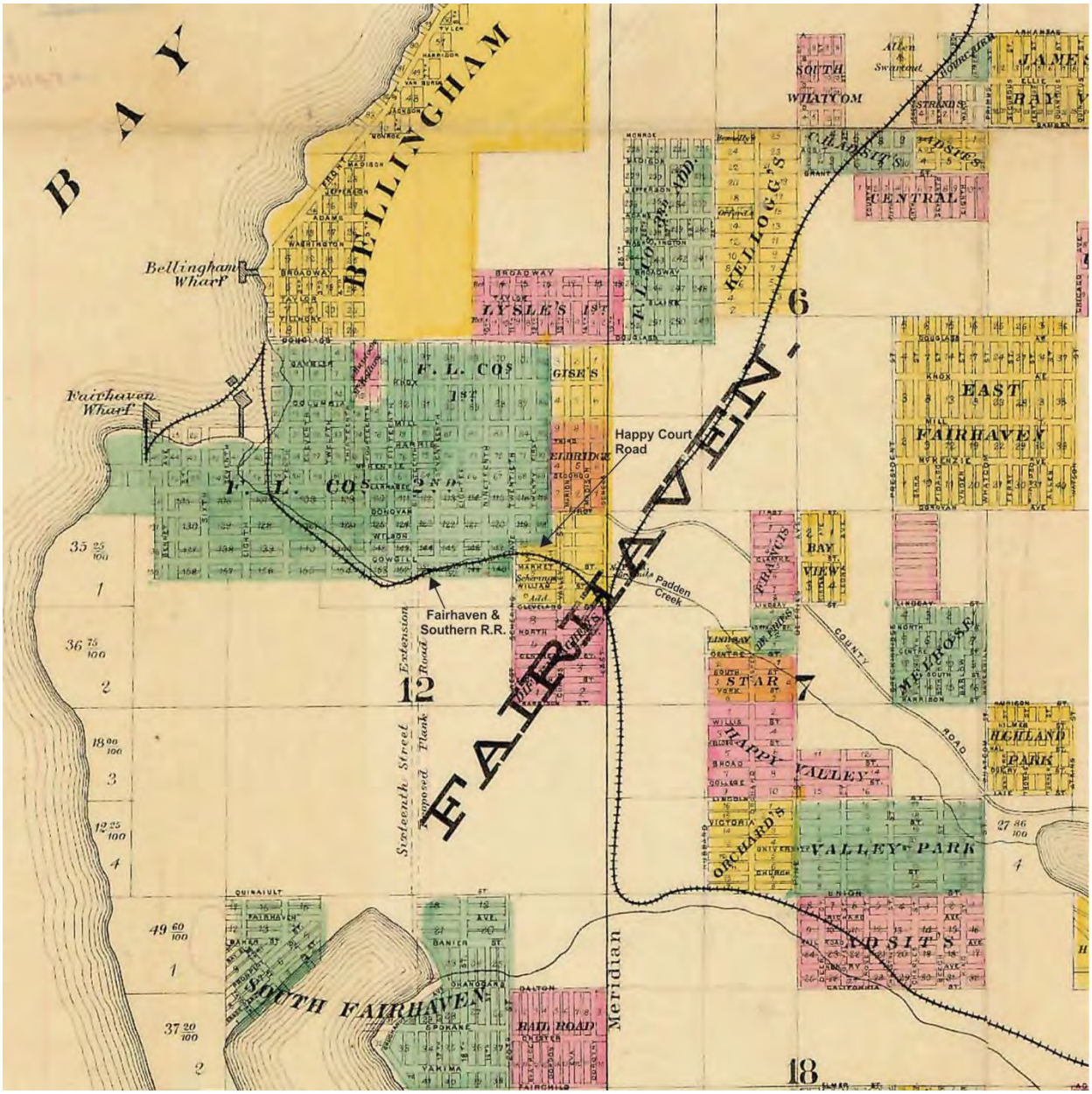

Figure 1. 1890 map detailing location of Historic Happy Court Road (Hinks 1890).

Figure 2. City of Bellingham 1922 plat map detailing location of Historic Happy Court Road (Adams 1922).

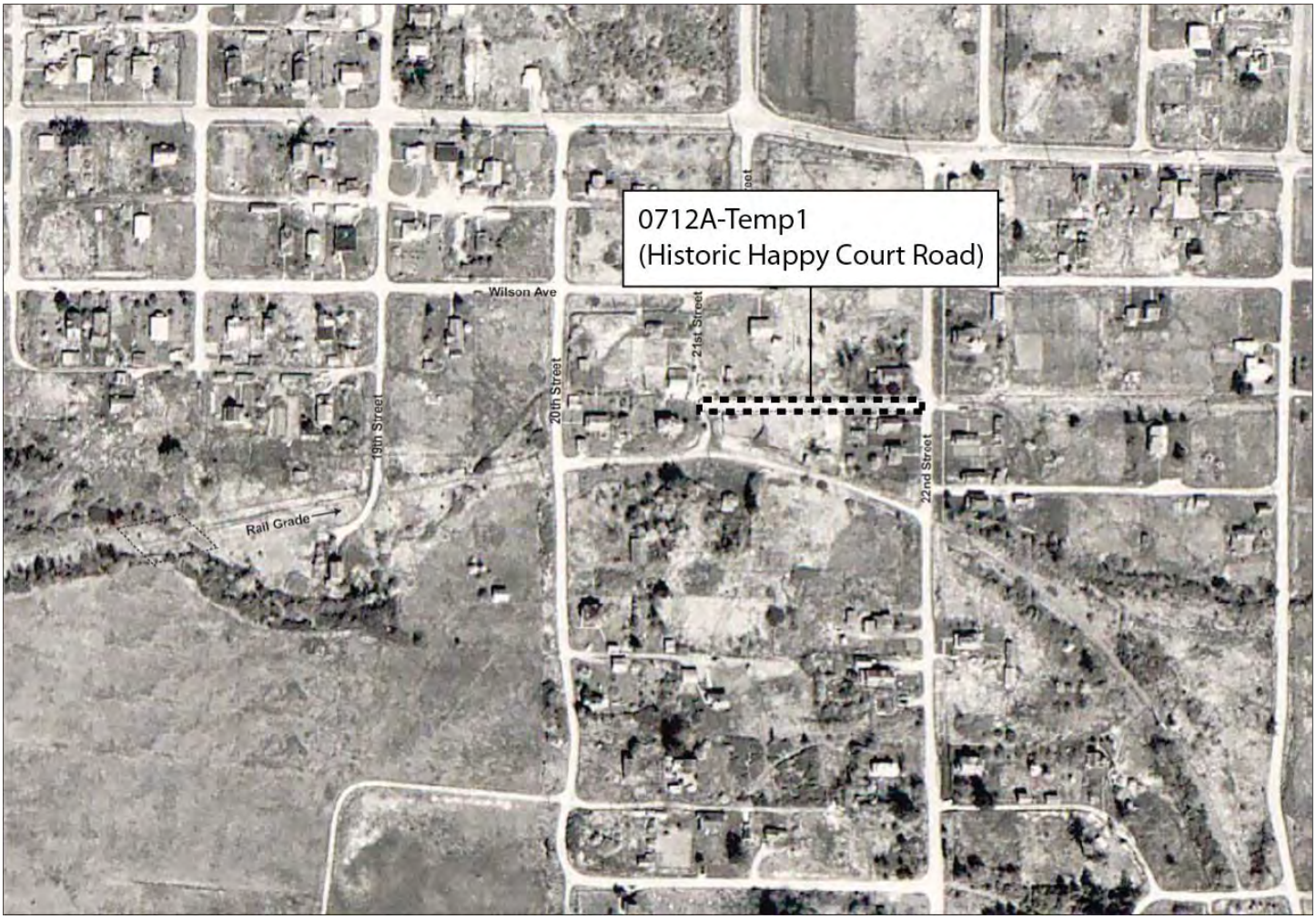

Figure 3. 1963 aerial detailing location of Historic Happy Court Road (*Courtesy* Whatcom Co. Tax Accessor).

Appendix D: Archaeological Site Inventory Form 0712A-Temp2 (Historic Railroad Property).

STATE OF WASHINGTON
ARCHAEOLOGICAL SITE INVENTORY FORM

Smithsonian No.:

***County:** Whatcom

***Date:** November 17, 2012 ***Compiler:** Brett N. Meidinger **Human Remains?** No

Location Information Restrictions *(Yes/No/Unknown)***:** No **DAHP Case No.:**

SITE DESIGNATION

Site Name: Historic F&S Railroad Grade

Field/ Temporary ID: 0712A-Temp2

Site Type(s)** *(Refer to the DAHP Survey and Inventory Guidelines Page 19):** Historic Railroad Property

SITE LOCATION

***USGS Quad Map Name(s):** Bellingham South

***Legal Description: T**37N **R** 2 **E/W:** E **Section(s):** 12

Quarter Section(s): N1/2 of the NE1/4

UTM: Zone 10 **Easting** 537147E **Northing** 5395960N

Latitude: 48°42'56 **Longitude:** 122°29'42 **Elevation (ft/m):** ~107 ft/33m

Other Maps: yes **Type:** Metsker, Plat

Scale: NA **Source:** Whatcom County Tax Accessor, City of Bellingham

Drainage, Major: Boundary Bay **Drainage, Minor:** Padden Creek **River Mile:**

Aspect: northwest **Slope:** gentle

Location Description** *(General to Specific):** The Historic F&S Railroad Grade is located in south Bellingham within the historic Fairhaven neighborhood, Whatcom County. It is situated one mile upstream from Boundary Bay within the Padden Creek floodplain and extends over Padden Creek between the interurban trail and the interurban rotary trailhead parking lot.

Directions** *(For Relocation Purposes):** From I-5 exit 250 proceed west on Old Fairhaven Parkway (SR-11) for .85 miles to the interurban rotary trailhead intersection. Turn south into the trailhead parking lot and continue for 200 ft to the western extent of the parking lot pavement. From the center of the lot proceed on a 261° W compass bearing for 140 ft to Padden Creek. The site is located on both banks of the creek channel.

SITE DESCRIPTION

Narrative Description** *(Overall Site Observations):** The site is a remnant railroad grade crossing over Padden Creek. The original railroad grade extends outside of the project APE southwest underneath the interurban trail and northeast toward the interurban rotary trailhead parking lot. Research indicates that this section of railroad grade was constructed in 1888 as part of the Fairhaven and Southern (F&S) Railroad, which was operated by the Great Northern Railroad from 1890 until the rails were torn up in 1903 (Bourasaw 2008). The rail-less grade was transferred to the Pacific Northwest Traction Company's (PNTC) who operated the "Interurban" Electric Railway along the old F & S grade from 1912 to 1929 (Adams 1922). Bellingham Parks Department acquired and incorporated the abandoned rail grade into portions of SR-11 and created the Interurban Trail which follows portions of the grade south through Fairhaven Park to Arroyo Park (Wessen 2005). The site has been heavily impacted from the 1903 extraction of the F & S rails, the re-establishment and construction of the Interurban electric rail in 1912 and its eventual removal in 1929.

Site Dimensions** *(Overall Site Dimensions):**

*__Length:__ 25 ft *__Direction:__ SW/NE *__Width:__ 30 ft *__Direction:__ SE/NW

*__Method of Horizontal Measurement:__ pace

*__Depth:__ on surface * __Method of Vertical Measurement:__ approximation

Vegetation** *(On Site):** Trees, shrubs

__Local:__ Western red cedar, hemlock forest with understory __Regional:__ Western hemlock zone

Landforms *(On Site)***:** floodplain

__Local:__ glacial upland

Water Resources *(Type)***:** Padden Creek

Distance: 10 ft

Permanence: permanent

CULTURAL MATERIALS AND FEATURES

***Narrative Description** *(Specific Inventory Details)*:** The site is comprised of only the railroad grade crossing at Padden Creek, measuring approximately 30 feet by 25 ft wide. The grade runs southwest to northeast atop an earthen berm that tapers from 2 ft high on the south side of Padden Creek down to ground level on the north side of the Creek.

The railroad grade crossing is situated at the northern terminus of a concrete retaining wall reinforcing the Padden Creek channel associated with the "Happy Valley Brick Tunnel System" historic property. The creek is reinforced on both channel walls and the channel floor by a cast in place concrete bag gravity type retaining wall (HPI Feature 5) which extends 300 ft downstream of the railroad grade crossing to the headwall (HPI Feature 2) and outfall of the brick tunnel (HPI Feature 3). While the retaining wall certainly functioned to support the railroad grade it appears to have been constructed in 1891-1892 several years after the railroad. The retaining wall was built as part of the city's sewer and storm water system that buried Padden Creek underground within a tunnel in order to drain the Happy Valley neighborhood and is not associated with the earlier F & S railroad. Therefore the retaining wall was recorded separately from the railroad grade as a contributing element of the Happy Valley brick tunnel system historic property.

***Method of Collection:** nothing collected

***Location of Artifacts** *(Temporary/Permanent)*:** NA

SITE AGE

***Component:** Historic

***Dates** *(Overall Site Age Approximation)*:** 1888-1903 and 1912-1929

***Dating Method:** maps and research

Phase: **Basis for Phase Designation:**

(Only those historic sites that meet the minimum National Register (36CFR60) age threshold (50 years of age or older) will be retained as historic archaeological records and assigned Smithsonian Trinomials by DAHP.)

SITE RECORDERS

Observed by: Brett Meidinger **Address:** P.O. Box 5424 Bellingham, WA 98227

***Date Recorded:** September 20, 2012

Recorded by** *(Professional Archaeologist):** Brett Meidinger

***Organization:** DAR ***Organization Phone Number:** 360.739.3921

***Organization Address:** P.O. Box 5424 Bellingham, WA 98227

***Organization E-mail:** brett@draytonarcheology.com

Date Revisited: **Revisited By:**

SITE HISTORY

Previous Archaeological Work** *(Done at Site):**

Garth L. Baldwin and Brett N. Meidinger
2012 Cultural Resources Assessment of the Proposed Padden Creek Daylighted Channel Project, Bellingham, Whatcom County, Washington. Prepared by Drayton Archaeological Research for SAIC Energy, Environment & Infrastructure, LLC.

LAND OWNERSHIP

***Owner:** City of Bellingham

***Address:** none

***Tax Lot/ Parcel No:** NA

RESEARCH REFERENCES

Items/Documents Used In Research** *(Specify):**

Adams, C. M.
1922 A Map of the City of Bellingham. On file at the Whatcom County Museum, Catalog Number X.2706.

Bourasaw, Noel V., editor.
2008 "Part Two: Fairhaven & Southern -The Metal Meets the Road" *Skagit River Journal of History & Folklore. Online Document. Accessed September 20, 2012. http://www.skagitriverjournal. com/RR/Sk-What/F-S02-Decline.html*

Meidinger, Brett N.
2012 Happy Valley Brick Tunnel System. Historic Property Inventory Form. On file at DAHP.

Wessen, Gary

2005 Washington Archaeological Site Inventory Form for 45WH725. On file at the DAHP.

Whatcom County Assessor
2009 Parcel Database Information System. Online document. Accessed June 25, 2009 at http://www.co.whatcom.wa.us/cgibin/db2www/assessor/search/RPSearch.ndt/disclaimer
assessor/search/RPSearch.ndt/disclaimer

USGS MAP

*__Quad Name(s):__ Bellingham South

__*Series:__ 7.5 minute

__*Date(s):__ 1989

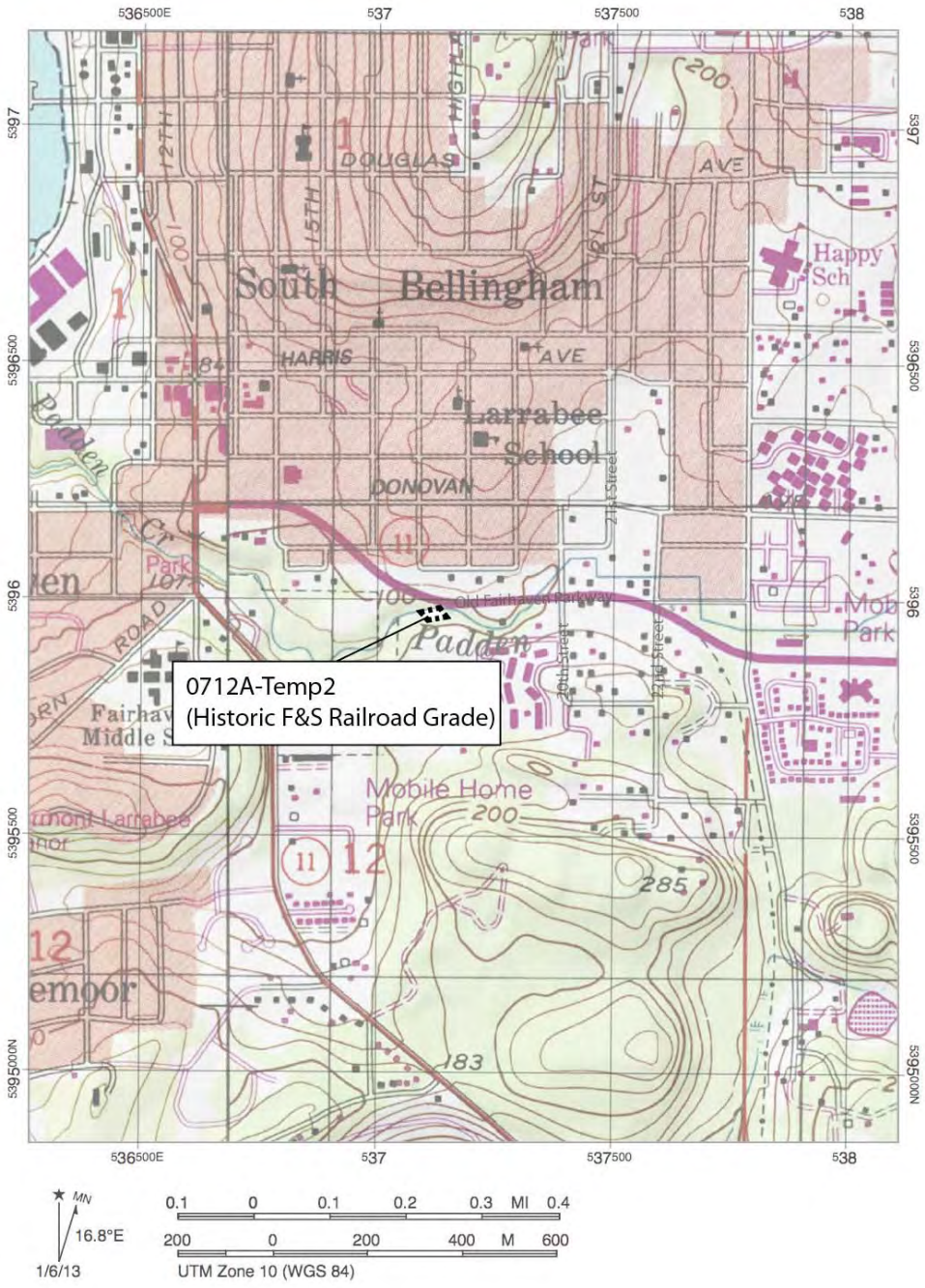

SKETCH MAP

***Sketch Map Description:** Design plan map illustrating the location of 0712A-Temp2 (Historic F&S Railroad Grade) site boundary (*Map courtesy of* GeoEngineers Inc.).

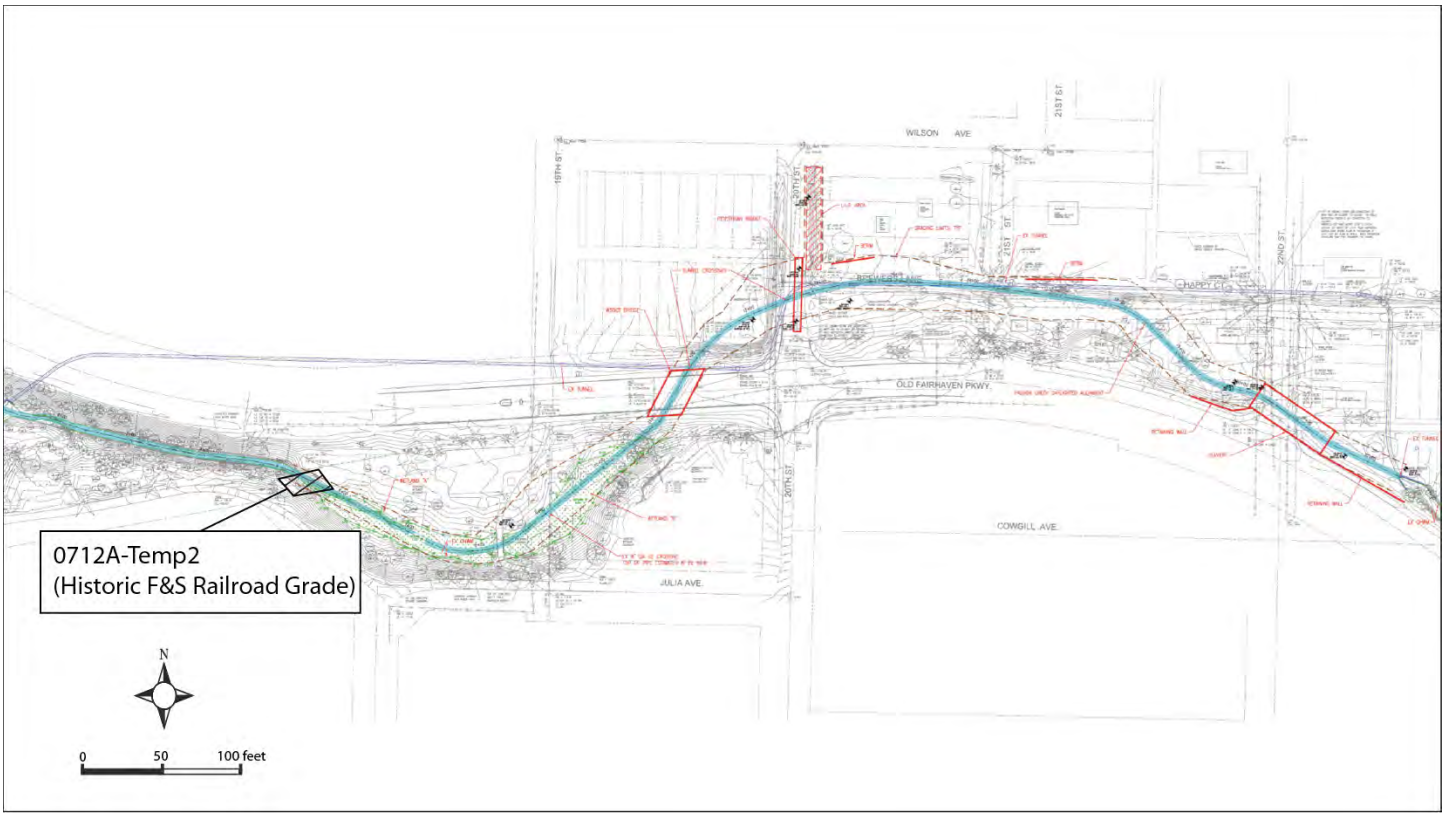

PHOTOGRAPH(S)

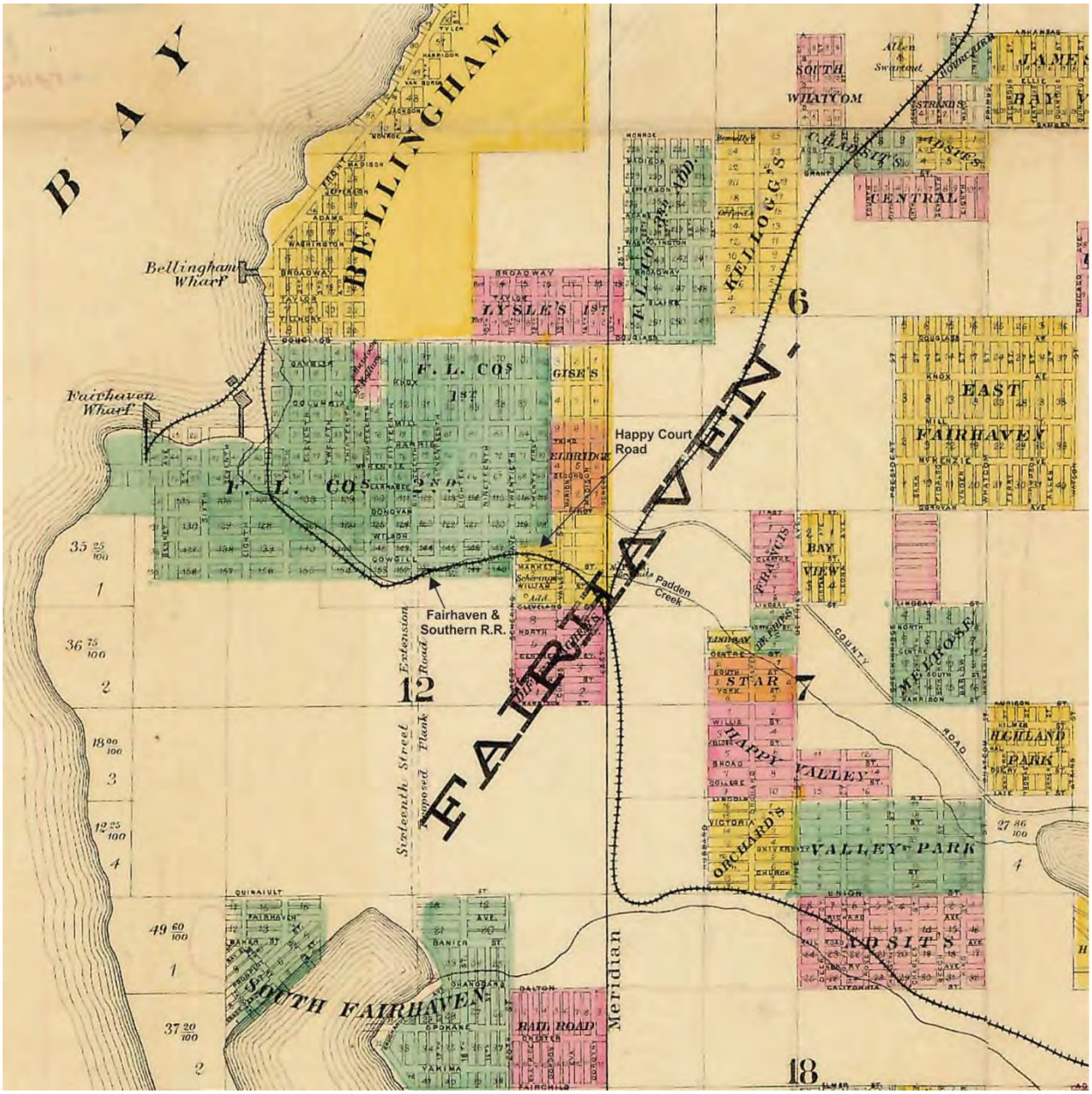

Figure 1. 1890 map detailing location of Historic F&S Railroad Grade (Hinks 1890).

Figure 2. City of Bellingham 1922 plat map detailing location of Historic F&S Railroad Grade (Adams 1922).

Figure 3. 1963 aerial detailing location of Historic F&S Railroad Grade (*Courtesy* Whatcom Co. Tax Accessor).

CULTURAL RESOURCES REPORT COVER SHEET

Author: Garth L. Baldwin & Brett N. Meidinger

Title of Report: Cultural Resource Assessment of the Proposed Padden Creek Daylighted Channel Project, Bellingham, Whatcom County, Washington

Date of Report: January 7, 2012

County (ies): Whatcom Sections: 12 Township: 37 N Range: 2E
Quad: Bellingham South Acres: ~2

CD Submitted? ☒ Yes ☐ No PDF of Report? ☒ Historic Property Export Files? ☒

Archaeological Site(s)/Isolate(s) Found or Amended? ☒ Yes ☐ No

TCP(s) found? ☐ Yes ☒ No

Replace a draft? ☐ Yes ☒ No

Satisfy a DAHP Archaeological Excavation Permit requirement? ☐ Yes # ☒ No

DAHP Archaeological Site #:
0712A-Temp1
0712A-Temp2
_____
_____
_____
_____
_____
_____

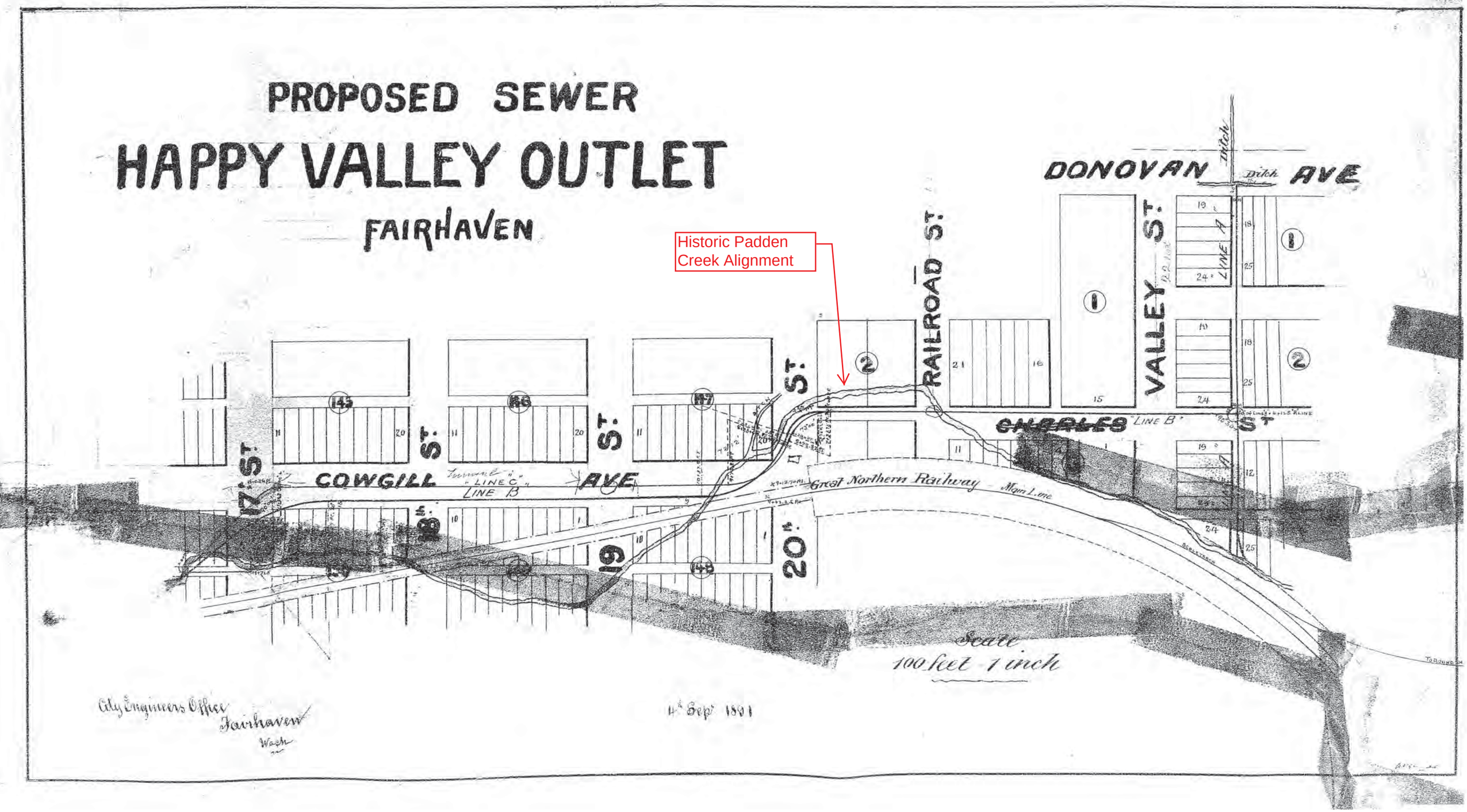
PROPOSED SEWER
HAPPY VALLEY OUTLET
FAIRHAVEN
Historic Padden Creek Alignment
DONOVAN AVE
Ditch
RAILROAD ST.
VALLEY ST.
LINE A
CHARLES ST.
LINE B
COWGILL AVE
LINE C
LINE B
17th ST.
18th ST.
19th ST.
20th ST.
Great Northern Railway
Main Line
Scale
100 feet 1 inch
City Engineers Office
Fairhaven
Wash
4th Sept 1891

Sewerage System
OF
FAIRHAVEN,
WASHINGTON.

SECTIONS 4 AND 5.

BRICK SEWER
(HAPPY VALLEY OUTLET.)

SCALE:-60 FT. = 1 IN.

CITY ENGINEER'S OFFICE
FAIRHAVEN WASHINGTON
JUNE 24, 1892.

Note:- Dotted black lines show streets and alleys in Edwards Addition as located in conformity to a possible construction of the sewerage on the recorded plat. They are added to this plat to show that under any possible construction the sewer line will be in the street.

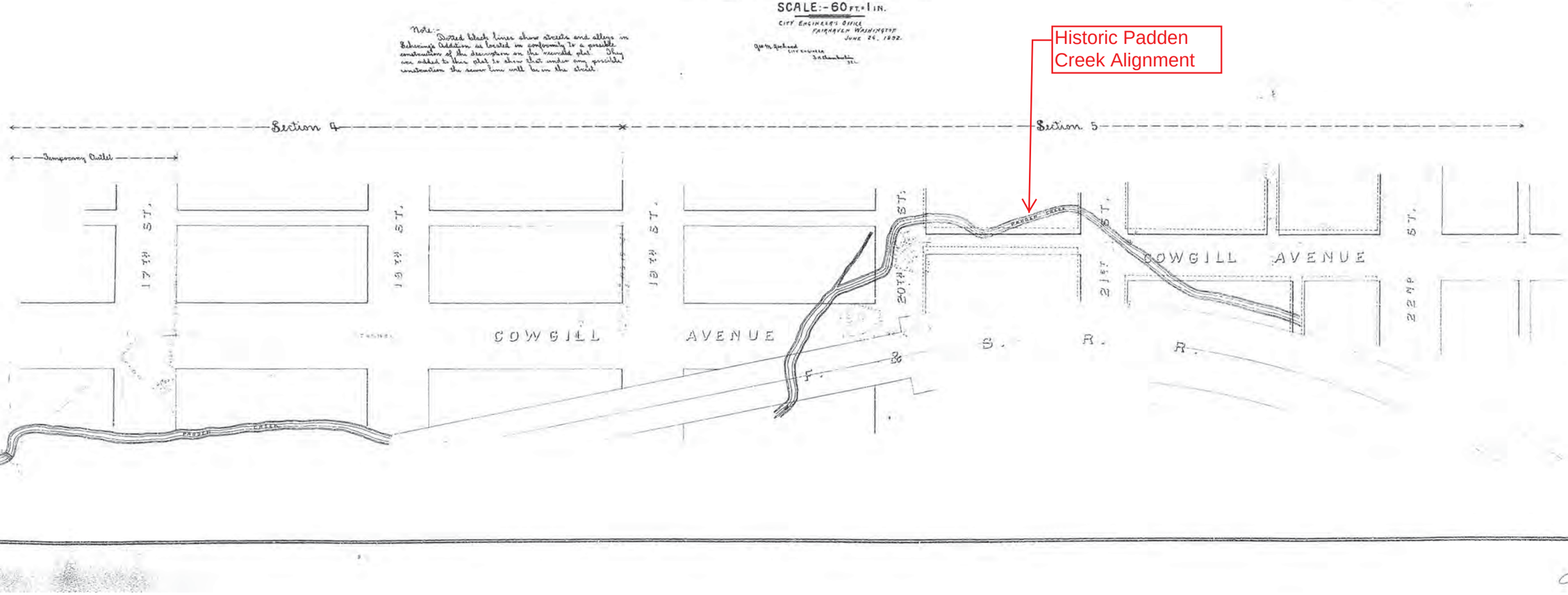

Historic Padden Creek Alignment

Padden Estuary Water Quality & Padden Creek Daylighting

May 5, 2015

City of Bellingham

Padden Estuary Water Quality

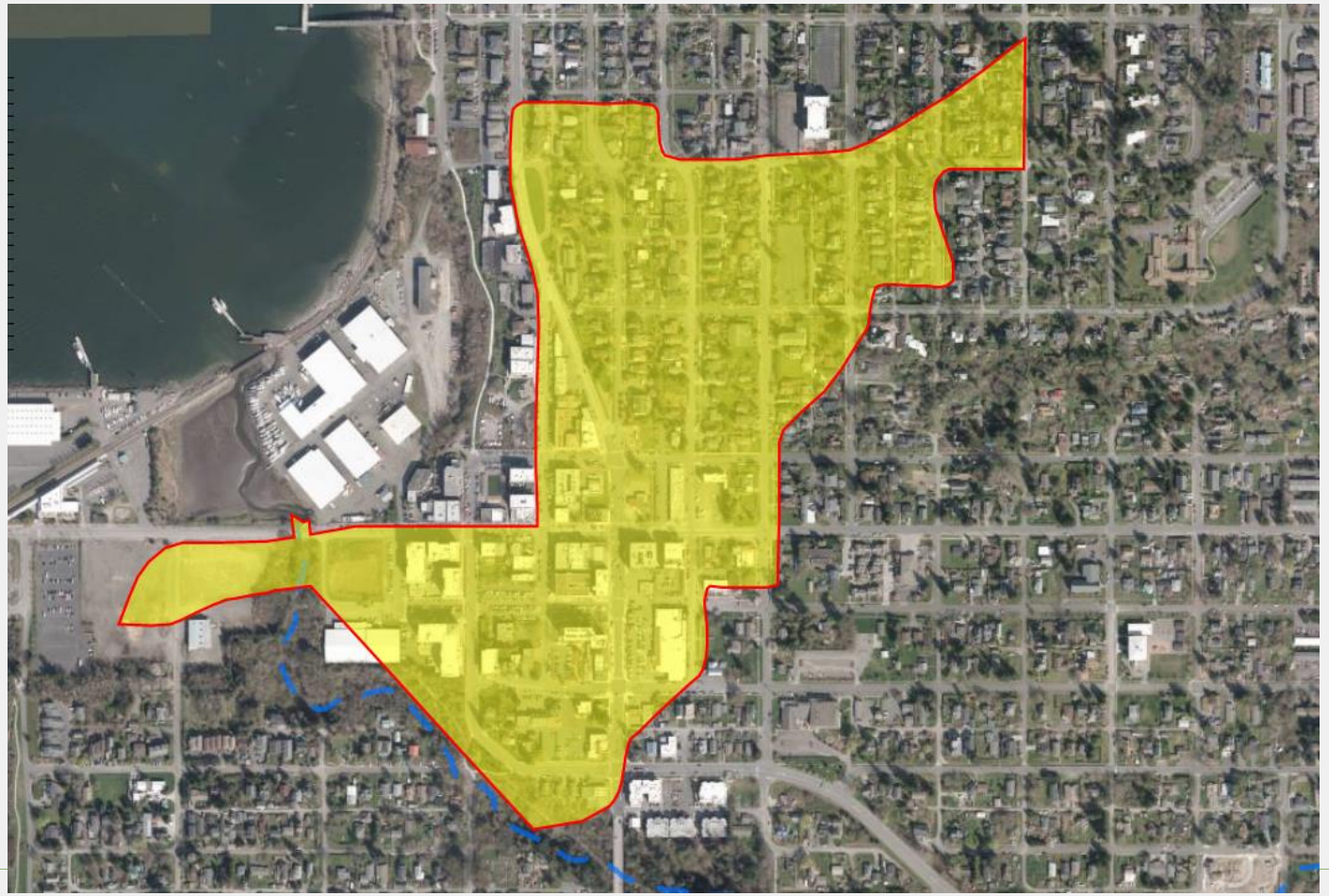

Padden Estuary Water Quality

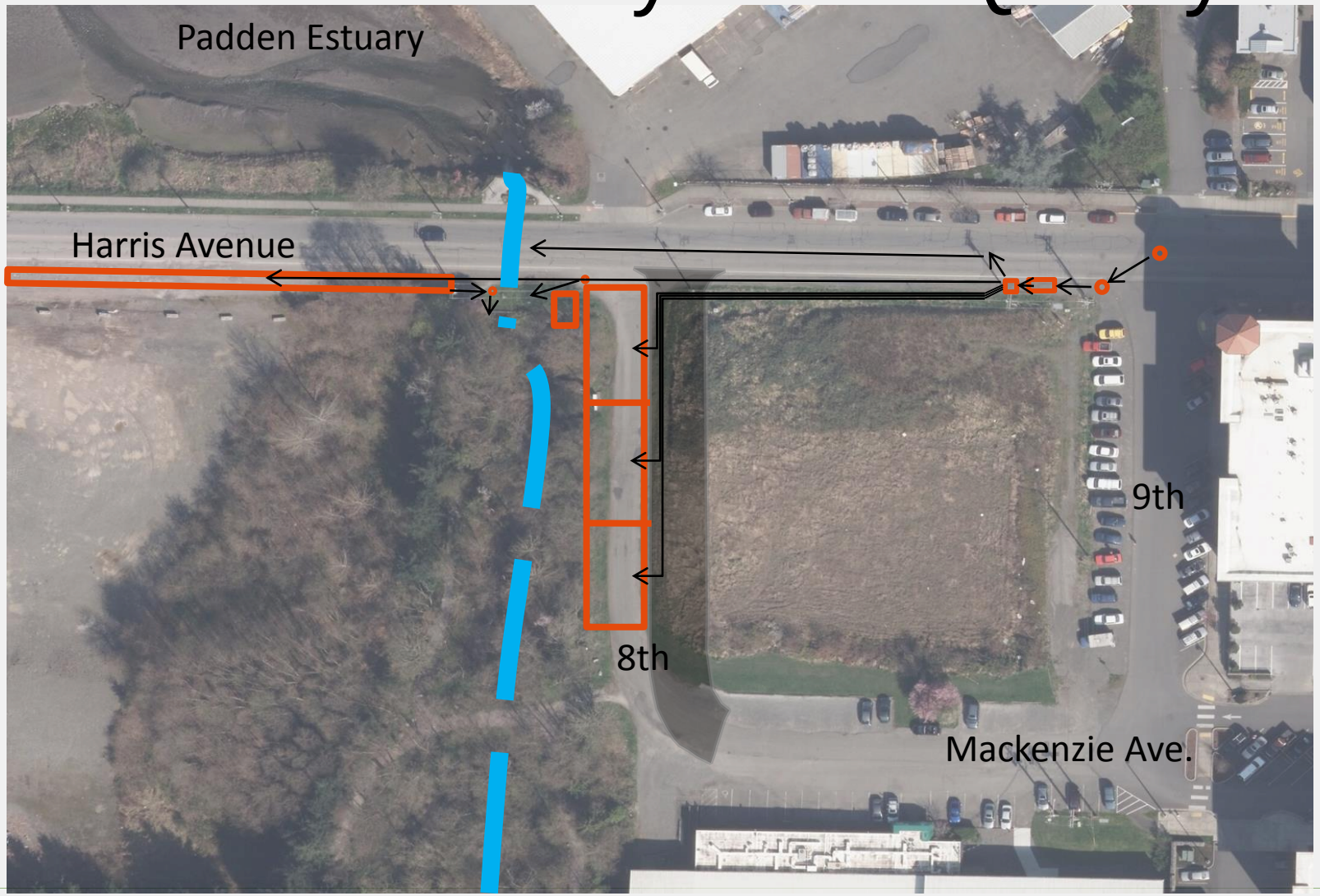

Storm Volumes Over a 10 Year Period

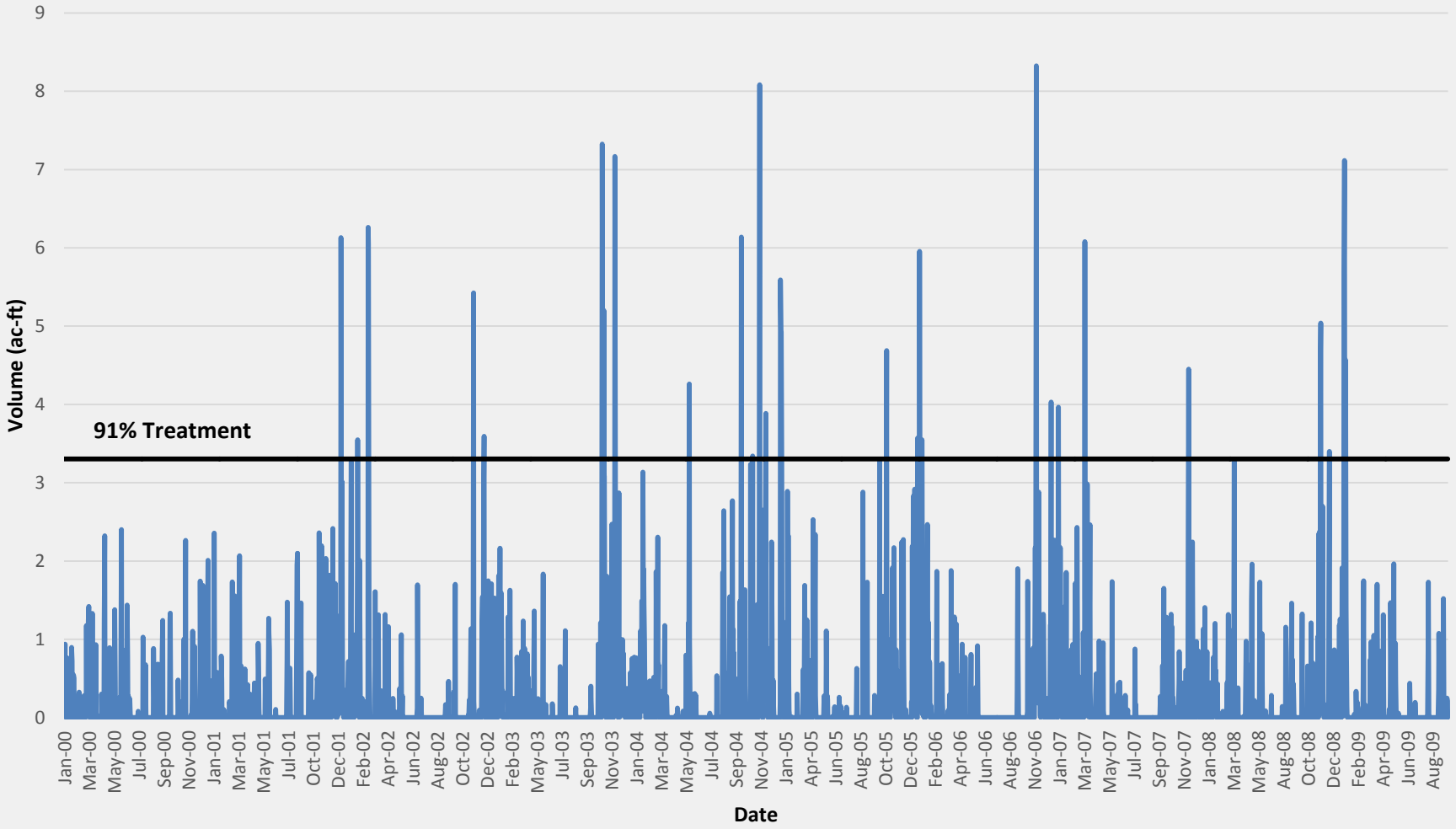

Water Quality Benefits

Enhanced treatment

- 80% removal of total suspended solids (dirt in the water)
- Dissolved copper 0.005 - 0.02 mg/L:

  > 30% dissolved copper removal
- Dissolved zinc 0.02 - 0.3 mg/L:

  > 60% dissolved zinc removal

Schedule

- May 2015 - Utility relocation
- July 2015 - Begin construction
- Nov 2015 - Complete construction

What to Expect During Construction

- Trees removed from edge of right-of-way
- Excavation equipment and trucks hauling
- Closure of 8th Street between Harris Avenue and Mackenzie Avenue
- Closure of trail head at Harris Avenue
- Traffic Control on Harris Avenue

What will it look like?

8th St. Planting Example

8th St. Planting Example

Padden Creek Daylighting

Challenges

- Padden Creek, between 17th and 22nd streets, flows in a tunnel constructed in the 1890's
  - The tunnel is the major blockage to fish passage
  - The tunnel is undersized and results in approximately 15 city blocks of residential housing that are in the flood plain

Padden Creek Area

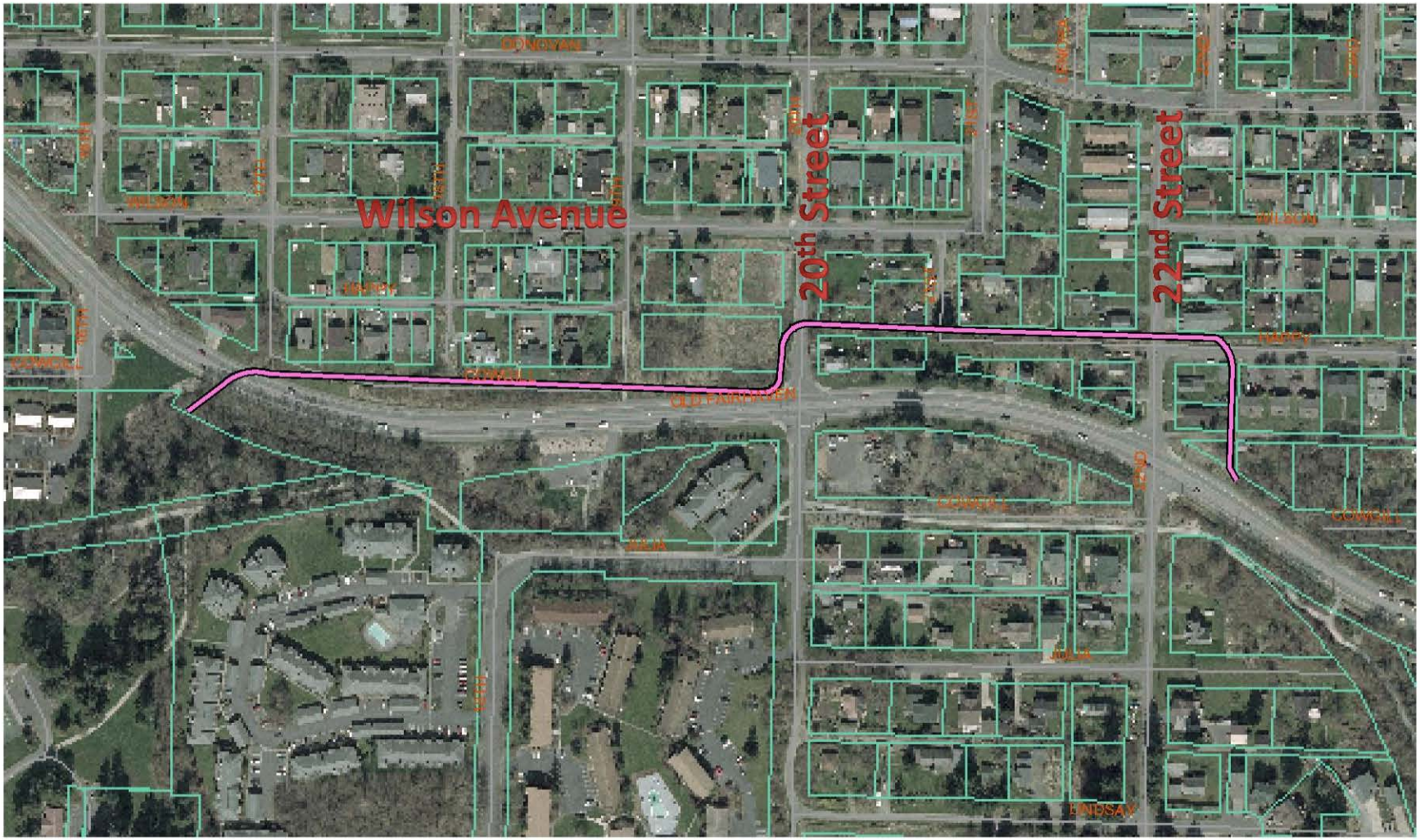

FEMA Floodway and Floodplain

Stakeholders

- Happy Valley Neighborhood Association
- WA Department of Ecology
- WA Department of Fish and Wildlife
- WA Department of Transportation
- City of Bellingham
- Padden Creek Alliance
  - Adjacent property owners
  - Concerned citizens
  - Fish advocates

Upstream end of tunnel

Downstream end of tunnel

What is the project?

- Construction of a creek channel between 17th and 22nd streets along Old Fairhaven Parkway
- Installation of habitat components
- Pedestrian bridge to Interurban Trail
- Culvert bridge at 22nd Street
- FEMA Letter of Map Revision

Project Benefits

- Improved water quality
- Increased fish habitat and fish passage
- New wildlife corridor
- Reduction in number of homes with a risk of flooding

Schedule

- WSDOT bridge construction completed in 2014
- Begin construction June 2015
- Stream complete by October 1, 2015
- Letter of Map Revision to FEMA in Fall 2015

What to Expect During Construction

- Trees removed within channel limits
- Excavation equipment and trucks hauling
- Temporary closure of Interurban Trail parking lot (likely entire project duration)
- Temporary closure of Interurban Trail between 16th and 20th streets (will try to minimize duration)
- Approximately 60-day closure of 22nd Street to thru traffic between Old Fairhaven Parkway and Happy Court
- Replanting (It **WILL** grow back)

What will it look like?

Whatcom Creek- During Construction

Whatcom Creek- Post Construction

Whatcom Creek- Today

Stabilization/Habitat at Cemetery Creek

Monitoring

- Ambient water quality for two years post construction
- Habitat (qualitative):
  - Native plant establishment and success
  - Fish presence and usage
- Annual Report for two years post project

Post Construction Maintenance

- Two City-sponsored Washington Conservation Corps Crews
- Currently maintain over 125 acres of re-vegetated habitat on previous City projects.
- Will plant site this fall and winter
- Visit site about six times per year for basic site maintenance such as weed suppression
- Will maintain site as long as needed – maintenance needs taper off as site matures.

Questions?

Larry Scholten, P.E., Project Engineer, ljscholten@cob.org 778-7923
Craig Mueller, P.E., Project Engineer, camueller@cob.org 778-7922
Renee LaCroix, Ecology and Restoration Manager, rlacroix@cob.org 778-7966

City of Bellingham

Padden Estuary Water Quality & Padden Creek Daylighting

Presented by:
Larry Scholten, P.E., Project Engineer
Craig Mueller, P.E., Project Engineer
Renee LaCroix, Ecology and Restoration Manager

City of Bellingham

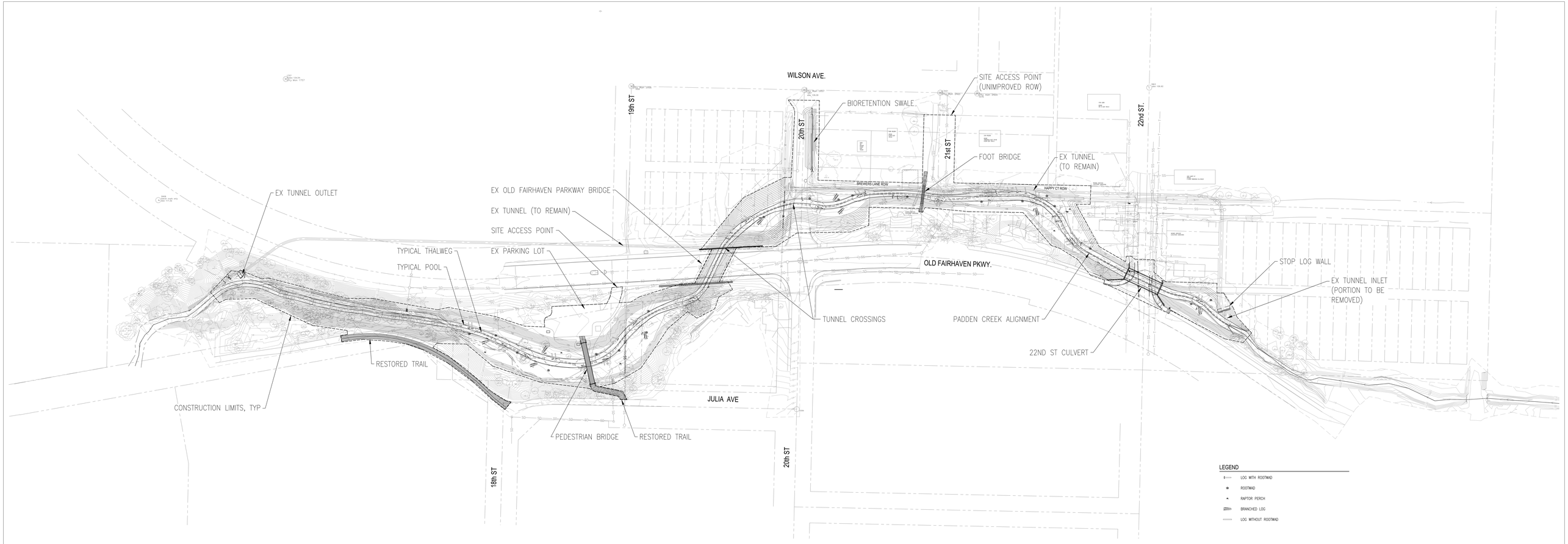

PLAN
SITE PLAN
SCALE: 1"=40'
1"=40'
40 20 0 40 80
Scale Feet

CITY OF BELLINGHAM, WASHINGTON
PUBLIC WORKS DEPARTMENT
ENGINEERING DIVISION

Louis Berger
999 Third Ave, Suite 500
Seattle, WA 98104
(206) 452-7500
louisberger.com

PADDEN CREEK DAYLIGHTING PROJECT

Padden Creek Daylighting Open House Presentation

June 4, 2013

City of Bellingham

Challenges

- Padden Creek, between 17th and 22nd streets, flows in a tunnel constructed in the 1890's
  - The tunnel is the major blockage to fish passage (67% blockage by WDFW rating)
  - The tunnel is undersized and results in approximately 15 city blocks of residential housing that are in the flood plain

Padden Creek Area

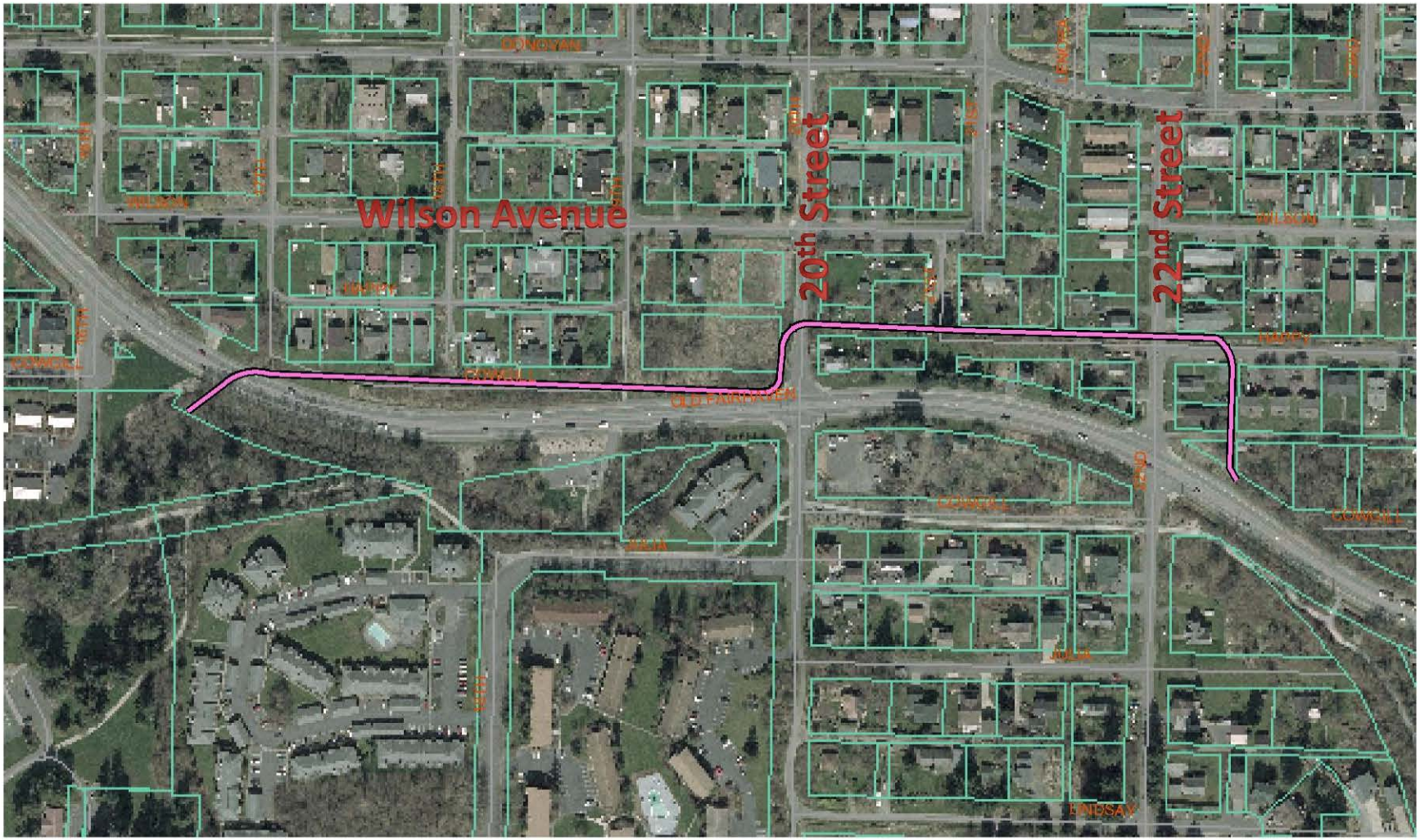

FEMA Floodway and Floodplain

Stakeholders

- Padden Creek Alliance
  - Adjacent property owners
  - Concerned citizens
  - Fish advocates
  - Happy Valley Neighborhood Association
- WA Department of Fish and Wildlife
- WA Department of Transportation
- Nooksack Salmon Enhancement Association
- City of Bellingham

Upstream end of tunnel

Downstream end of tunnel

Padden Creek Lagoon

What is the project?

- Construction of a creek channel between 17th and 22nd streets along Old Fairhaven Parkway
- Project removes the major fish blockage for the creek
- Project eliminates reliance on a 1890's tunnel to convey Padden Creek

What more is the project?

- Construction of the channel should alleviate the flood hazard for approximately 80 residences. This would result in savings on insurance for the property owners.

Work to date

- 1997- Present: Work sessions with Padden Creek Alliance, interested parties and the City of Bellingham
- 2001: Feasibility study by City (RW Beck) which removes tunnel
- 2002: Feasibility study by Jones Engineering for Padden Creek Alliance which retains tunnel
- 2011: DOE Revolving loan of $1,426,000 and Centennial Grant of $500,000 received

Work to date

- Property acquisition
- 2012: SAIC (formerly RW Beck) teamed with Jones Engineers begin work on design
- 2013: Currently at 60% design stage for the creek
- 2013: WSDOT begins bridge construction on Old Fairhaven Parkway for future creek channel

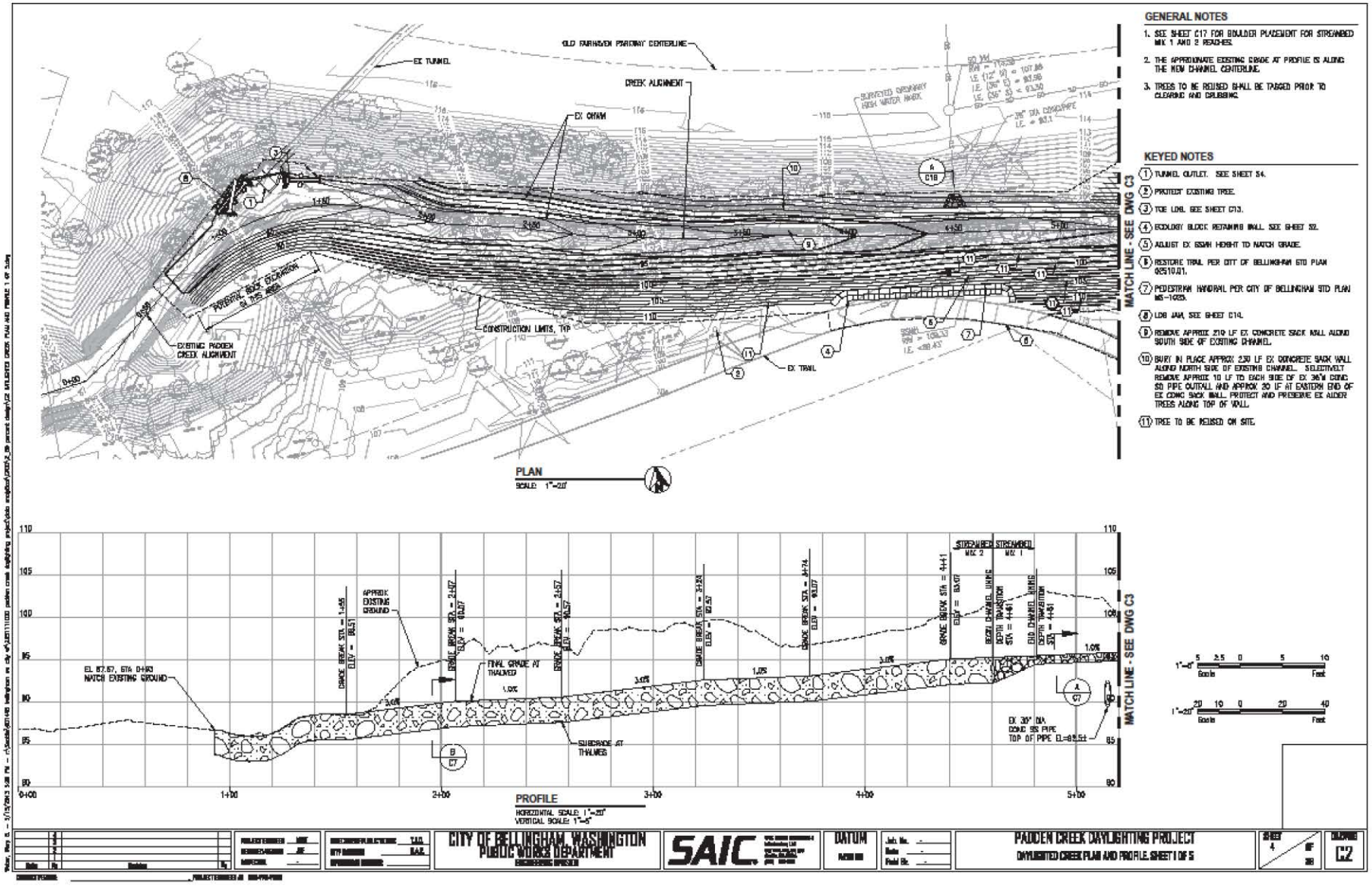

CITY OF BELLINGHAM, WASHINGTON
PUBLIC WORKS DEPARTMENT

SAIC

DATUM

PADDEN CREEK DAYLIGHTING PROJECT
DAYLIGHTED CREEK PLAN AND PROFILE, SHEET 1 OF 5

SHEET 4 OF 38

DRAWING C.2

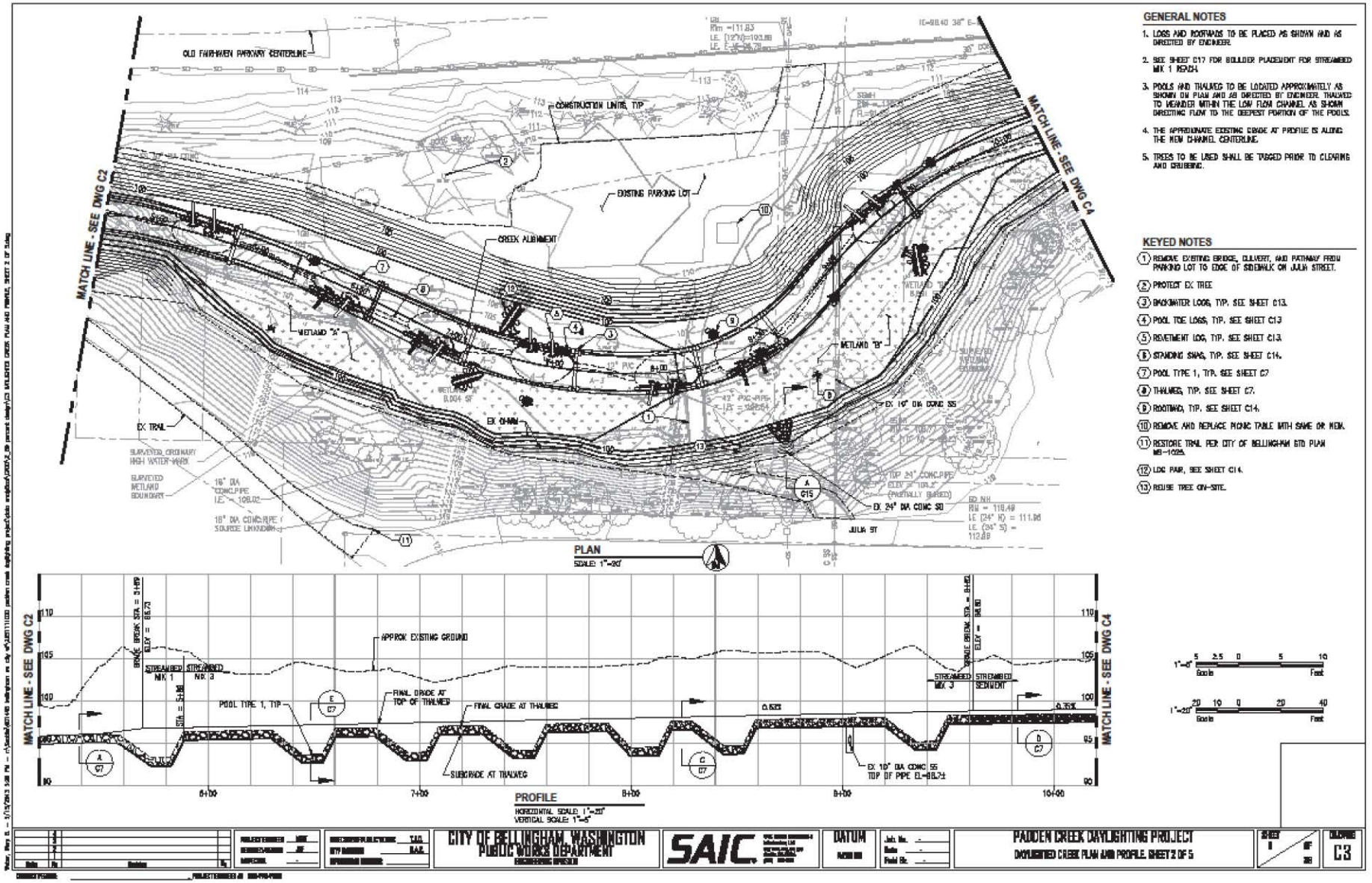
GENERAL NOTES
1. LOGS AND ROOTWADS TO BE PLACED AS SHOWN AND AS DIRECTED BY ENGINEER.
2. SEE SHEET C17 FOR BOULDER PLACEMENT FOR STREAMBED MIX 1 REACH.
3. POOLS AND THALWEG TO BE LOCATED APPROXIMATELY AS SHOWN ON PLAN AND AS DIRECTED BY ENGINEER. THALWEG TO MEANDER WITHIN THE LOW FLOW CHANNEL AS SHOWN DIRECTING FLOW TO THE DEEPEST PORTION OF THE POOLS.
4. THE APPROXIMATE EXISTING GRADE AT PROFILE IS ALONG THE NEW CHANNEL CENTERLINE.
5. TREES TO BE USED SHALL BE TAGGED PRIOR TO CLEARING AND GRUBBING.
KEYED NOTES
1 REMOVE EXISTING BRIDGE, CULVERT, AND PATHWAY FROM PARKING LOT TO EDGE OF SIDEWALK ON JULIA STREET.
2 PROTECT EX TREE
3 BACKWATER LOGS, TYP. SEE SHEET C13.
4 POOL TOE LOGS, TYP. SEE SHEET C13
5 REVETMENT LOG, TYP. SEE SHEET C13.
6 STANDING SNAG, TYP. SEE SHEET C14.
7 POOL TYPE 1, TYP. SEE SHEET C7
8 THALWEG, TYP. SEE SHEET C7.
9 ROOTWAD, TYP. SEE SHEET C14.
10 REMOVE AND REPLACE PICNIC TABLE WITH SAME OR NEW.
11 RESTORE TRAIL PER CITY OF BELLINGHAM STD PLAN NO-102a.
12 LOG PAIR, SEE SHEET C14.
13 REUSE TREE ON-SITE.
OLD FAIRHAVEN PARKWAY CENTERLINE
CONSTRUCTION LIMITS, TYP
EXISTING PARKING LOT
CREEK ALIGNMENT
MATCH LINE - SEE DWG C2
MATCH LINE - SEE DWG C4
WETLAND "A"
WETLAND "B"
EX TRAIL
EX CHAIN
JULIA ST
EX 24" DIA CONC SD
EX 15" DIA CONC SS
PLAN
SCALE: 1"=20'
APPROX EXISTING GROUND
FINAL GRADE AT TOP OF THALWEG
FINAL GRADE AT THALWEG
SUBGRADE AT THALWEG
POOL TYPE 1, TYP
STREAMBED MIX 1
STREAMBED MIX 3
STREAMBED SEDIMENT
EX 10" DIA CONC SS
PROFILE
HORIZONTAL SCALE: 1"=20'
VERTICAL SCALE: 1"=5'
CITY OF BELLINGHAM, WASHINGTON
PUBLIC WORKS DEPARTMENT
SAIC
DATUM
PADDEN CREEK DAYLIGHTING PROJECT
DAYLIGHTED CREEK PLAN AND PROFILE, SHEET 2 OF 5
SHEET 1
DRAWING C3

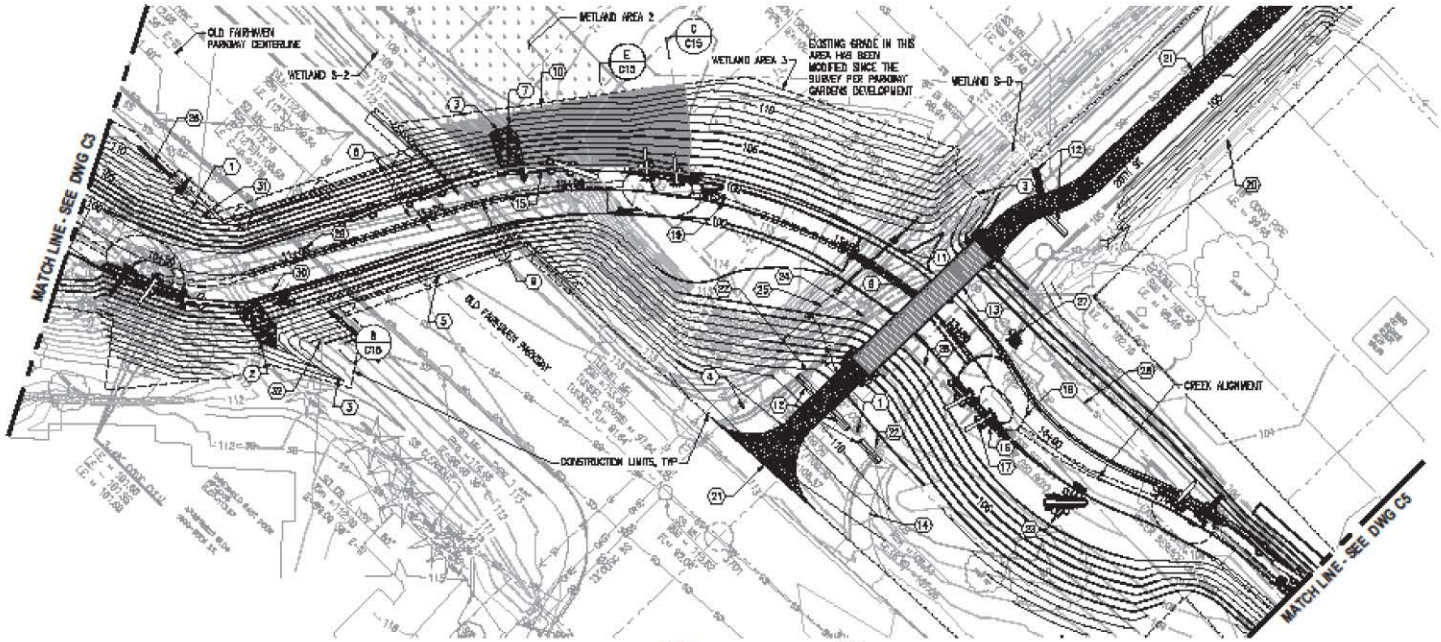

PLAN
SCALE: 1" = 20'

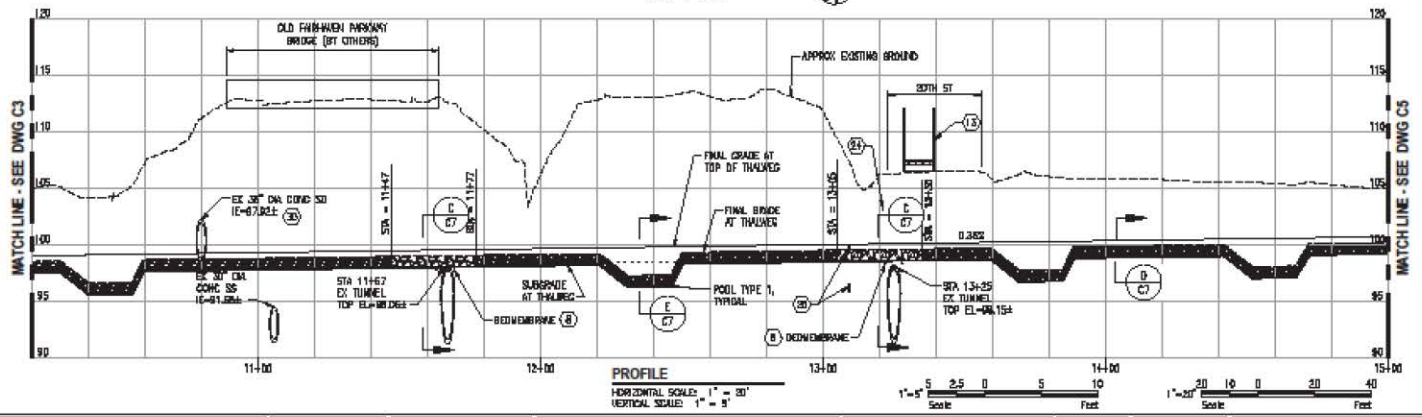

PROFILE
HORIZONTAL SCALE: 1" = 20'
VERTICAL SCALE: 1" = 5'

GENERAL NOTES

1. LOGS AND ROOTWADS TO BE PLACED AS SHOWN ON PLANS AND AS DIRECTED BY THE ENGINEER.
2. POOLS AND THALWEG TO BE LOCATED APPROXIMATELY AS SHOWN ON PLAN AND AS DIRECTED BY ENGINEER. THALWEG TO MEANDER WITHIN THE LOW FLOW CHANNEL AS SHOWN DIRECTING FLOW TO THE DEEPEST PORTION OF THE POOLS.
3. THE APPROXIMATE EXISTING GRADE AT PROFILE IS ALONG THE NEW CHANNEL CENTERLINE.
4. TREES TO BE REUSED SHALL BE TAGGED PRIOR TO CLEARING AND GRUBBING.

KEYED NOTES

1. PLUG EX SD PIPE WITH CONCRETE.
2. 8' BY 18" BY 1' THICK QUARRY SPALLS
3. CONNECT EXISTING DRAINAGE SWALE TO CHANNEL.
4. REMOVE EXISTING SIDEWALK. SEE SHEET C11.
5. CHANNEL CONSTRUCTION UNDER BRIDGE THIS PROJECT. BRIDGE AND RETAINING WALLS BY OTHERS
6. REMOVE THREE (3) EX 48" DIA CONC CULVERTS, APPROX 141 LF EACH.
7. 6'W BY 15'L BY 1' THICK QUARRY SPALLS
8. PLACE GEOMEMBRANE OVER TOP OF TUNNEL TO PREVENT POTENTIAL PIPING OF FINES FROM CHANNEL LINING, SEE DETAIL X, SHEET X.
9. EXISTING TUNNEL CROSSINGS TWO (2) LOCATIONS.
10. COMPACTED TILL LINER TO PRESERVE EX WETLAND HYDROLOGY.
11. RELOCATE EX UTILITY POLE (BY OTHERS).
12. CONCRETE BARRIER, WSDOT TYPE 2, TYP. SEE SHEET C11.
13. PEDESTRIAN BRIDGE. SEE SHEET C11.
14. REMOVE EX SIDEWALK. SEE SHEET C11.
15. TOE LOG, TYP. SEE SHEET C13.
16. POOL TOE LOGS, TYP. SEE SHEET C13.
17. REVETMENT LOG, TYP SEE SHEET C13.
18. POOL TYPE 1, TYP. SEE SHEET C7.
19. THALWEG, TYP. SHEET SHEET C7.
20. BIORETENTION SWALE, SEE SHEET C12.
21. TRAIL. SEE SHEET C11.
22. ABANDON EXISTING CB.
23. LOG PAIR, TYP. SEE SHEET C14.
24. EX TELECOM CONDUIT TO BE RELOCATED BY OTHERS. SIZE AND DEPTH UNKNOWN.
25. EX 8" DIA DI WATER MAIN TO BE RELOCATED. SEE 20TH ST WATER MAIN RELOCATION PROFILE, SHEET C11.
26. EXTEND HEADWALL. SEE SHEET X.
27. ROOTWAD, TYP. SEE SHEET C14.
28. EX WATER SERVICE. SEE SHEET C11.
29. REMOVE APPROX 37 LF ABANDONED 36"ø CONC SD.
30. MODIFY EX 36" SD TO CREATE OUTFALL TO CHANNEL. SEE SECTION B, SHEET C10.
31. REMOVE EX CB TYPE 2, 60"ø.
32. ADJUST EX SD CB TYPE 2 60"ø HEIGHT TO MATCH GRADE.

CITY OF BELLINGHAM, WASHINGTON
PUBLIC WORKS DEPARTMENT

SAIC

DATUM

PADDEN CREEK DAYLIGHTING PROJECT
DAYLIGHTED CREEK PLAN AND PROFILE SHEET 3 OF 5

SHEET 1 OF 38

DRAWING C4

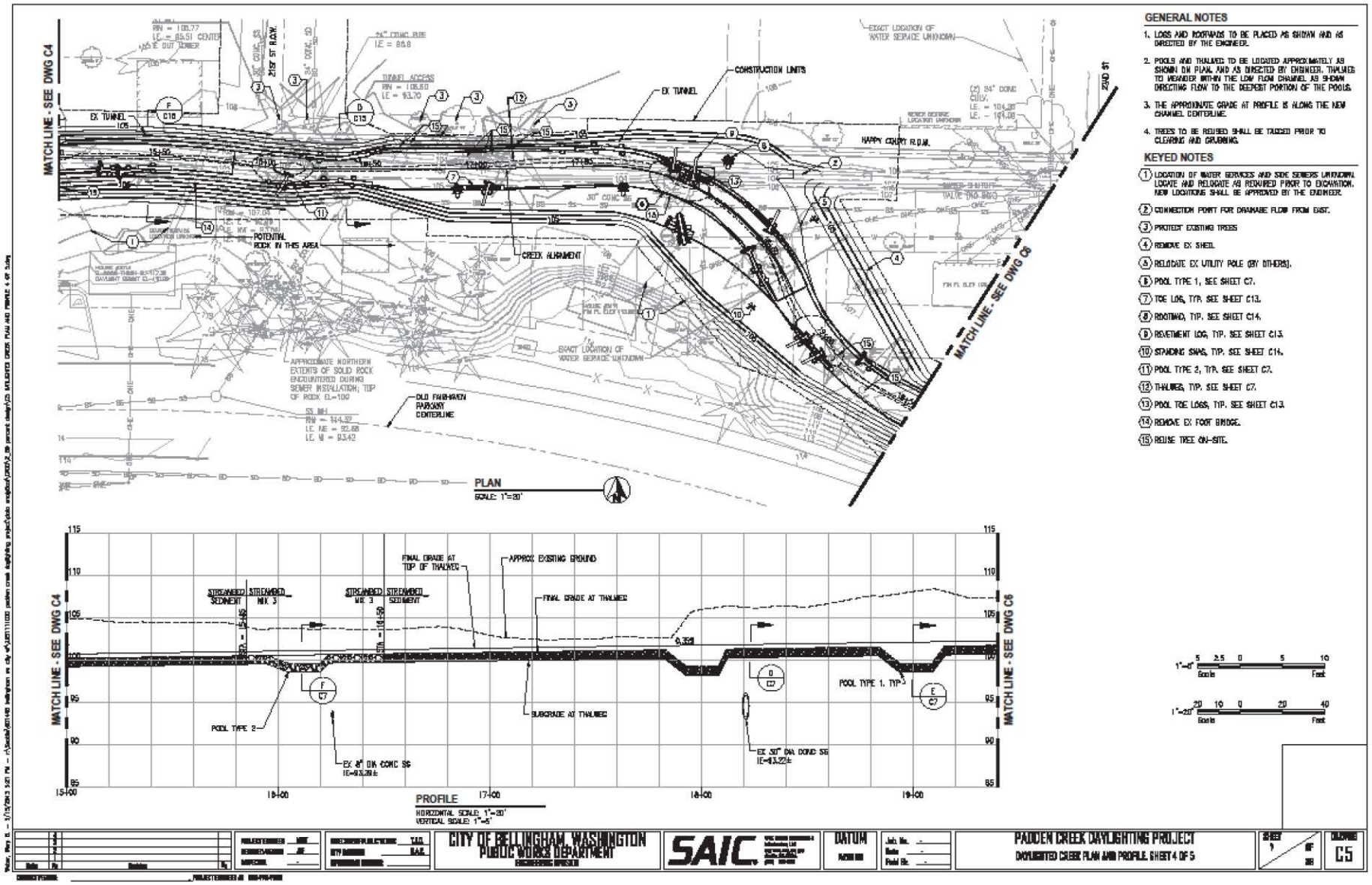

GENERAL NOTES

1. LOGS AND ROOTWADS TO BE PLACED AS SHOWN AND AS DIRECTED BY THE ENGINEER.
2. POOLS AND THALWEG TO BE LOCATED APPROXIMATELY AS SHOWN ON PLAN, AND AS DIRECTED BY ENGINEER. THALWEG TO MEANDER WITHIN THE LOW FLOW CHANNEL AS SHOWN DIRECTING FLOW TO THE DEEPEST PORTION OF THE POOLS.
3. THE APPROXIMATE GRADE AT PROFILE IS ALONG THE NEW CHANNEL CENTERLINE.
4. TREES TO BE REUSED SHALL BE TAGGED PRIOR TO CLEARING AND GRUBBING.

KEYED NOTES

1. LOCATION OF WATER SERVICES AND SIDE SEWERS UNKNOWN. LOCATE AND RELOCATE AS REQUIRED PRIOR TO EXCAVATION. NEW LOCATIONS SHALL BE APPROVED BY THE ENGINEER.
2. CONNECTION POINT FOR DRAINAGE FLOW FROM EAST.
3. PROTECT EXISTING TREES
4. REMOVE EX SHED.
5. RELOCATE EX UTILITY POLE (BY OTHERS).
6. POOL TYPE 1, SEE SHEET C7.
7. TOE LOG, TYP. SEE SHEET C13.
8. ROOTWAD, TYP. SEE SHEET C14.
9. REVETMENT LOG, TYP. SEE SHEET C13.
10. STANDING SNAG, TYP. SEE SHEET C14.
11. POOL TYPE 2, TYP. SEE SHEET C7.
12. THALWEG, TYP. SEE SHEET C7.
13. POOL TOE LOGS, TYP. SEE SHEET C13.
14. REMOVE EX FOOT BRIDGE.
15. REUSE TREE ON-SITE.

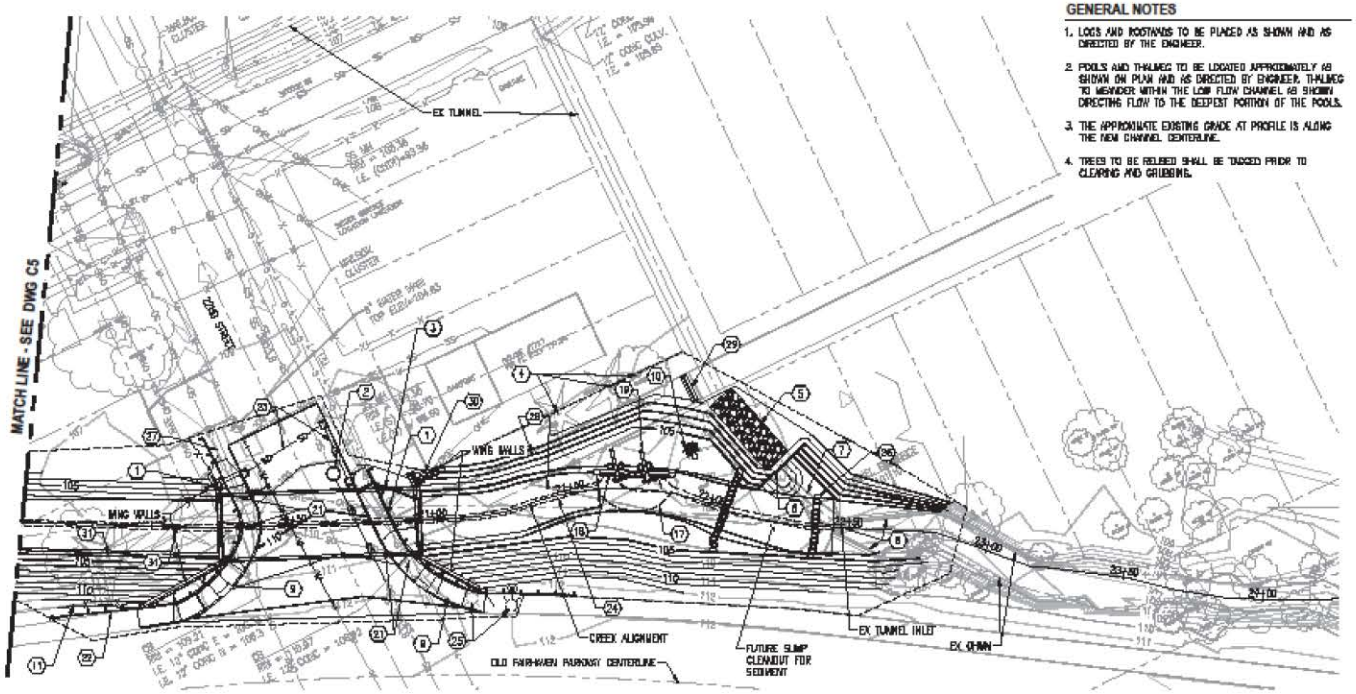

PLAN
SCALE: 1"=20'

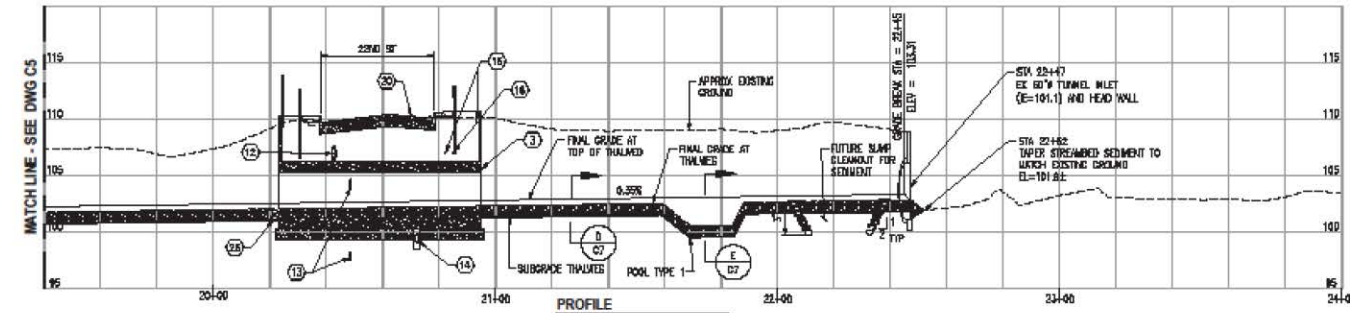

PROFILE
HORIZONTAL SCALE: 1"=20'
VERTICAL SCALE: 1"=5'

GENERAL NOTES

1. LOGS AND ROOTWADS TO BE PLACED AS SHOWN AND AS DIRECTED BY THE ENGINEER.
2. POOLS AND THALWEG TO BE LOCATED APPROXIMATELY AS SHOWN ON PLAN AND AS DIRECTED BY ENGINEER. THALWEG TO MEANDER WITHIN THE LOW FLOW CHANNEL AS SHOWN DIRECTING FLOW TO THE DEEPEST PORTION OF THE POOLS.
3. THE APPROXIMATE EXISTING GRADE AT PROFILE IS ALONG THE NEW CHANNEL CENTERLINE.
4. TREES TO BE FELLED SHALL BE TAGGED PRIOR TO CLEARING AND GRUBBING.

KEYED NOTES

1. EX UTILITY POLE RELOCATED BY OTHERS.
2. PROTECT EX SSMH. SEE SHEET C6.
3. CONCRETE BOX CULVERT. SEE SHEET C8.
4. PROTECT EX TREES.
5. 30'Lx10'Wx1'D QUARRY SPALL ACCESS PAD.
6. STOP LOG WALL (TO PLUG TUNNEL OPENING). SEE SHEET S01.
7. REMOVE 30 LF EX 60" DIA CONC TUNNEL.
8. REMOVE EX WING WALLS AND HEAD WALL.
9. REMOVE AND REPLACE CURB, GUTTER AND SIDEWALK. SEE SHEET C01.
10. ROOTWAD, TYP. SEE SHEET C14.
11. REMOVE AND REPLACE EX FENCE. SEE SHEET C6.
12. REMOVE EX 12" DIA CONC SD, IE 106.3 +/-. SEE SHEET C8.
13. EX 8" DIA WATER MAIN (TOP EL. 104.83 +/-) TO BE RELOCATED. SEE SHEET C9.
14. REPLACE AND PROTECT EX 8" DIA CONC SS (EX IE 99.01 +/-). SEE SHEET C8.
15. EX GAS MAIN TO BE RELOCATED BY OTHERS. SIZE AND DEPTH UNKNOWN. CONTRACTOR TO VERIFY LOCATION PRIOR TO CONSTRUCTION.
16. EX TELECOM CONDUIT TO BE RELOCATED BY OTHERS. SIZE AND DEPTH UNKNOWN. CONTRACTOR TO VERIFY LOCATION PRIOR TO CONSTRUCTION.
17. POOL TYPE 1. SEE SHEET C7.
18. POOL TOE LOGS, TYP. SEE SHEET C13.
19. REVETMENT LOG, TYP. SEE SHEET C13.
20. RESTORE PAVEMENT. SEE SHEET C8.
21. REMOVE EX CB AND ASSOCIATED PIPE. SEE SHEET C8.
22. GUARDRAIL, TYP. SEE SHEET C8.
23. INSTALL NEW SD. SEE PROFILE SHEET C15.
24. THALWEG, SEE SHEET C7.
25. RELOCATE LUMINAIRE. SEE SHEET C8.
26. BIO CONTROL ROCK
27. PLUG EXISTING PIPE.
28. REMOVE EX GRAVEL ROAD, APPROX 2,800 SF.
29. CONCRETE BARRIER, WSDOT TYPE 2.
30. ROCKERY WALL. SEE SHEET C8.
31. REUSE TREE ON-SITE.

1"=5' Scale: 5 2.5 0 5 10 Feet
1"=20' Scale: 20 10 0 20 40 Feet

CITY OF BELLINGHAM, WASHINGTON
PUBLIC WORKS DEPARTMENT
ENGINEERING DIVISION

SAIC

DATUM

PADDEN CREEK DAYLIGHTING PROJECT
DAYLIGHTED CREEK PLAN AND PROFILE SHEET 5 OF 5

SHEET 1 OF 28

DRAWING C6

Typical Sections

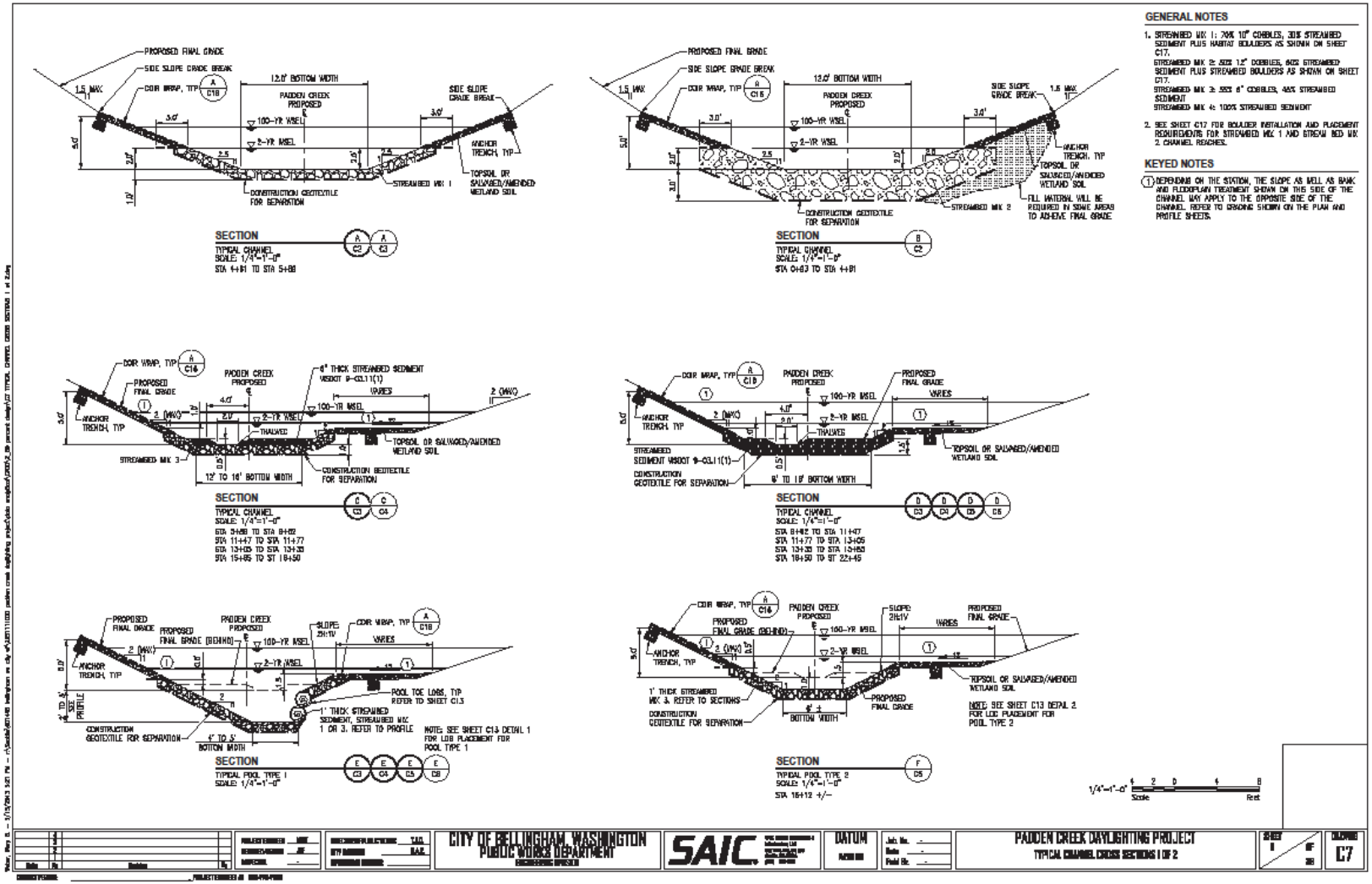

20th Street Footbridge Detail

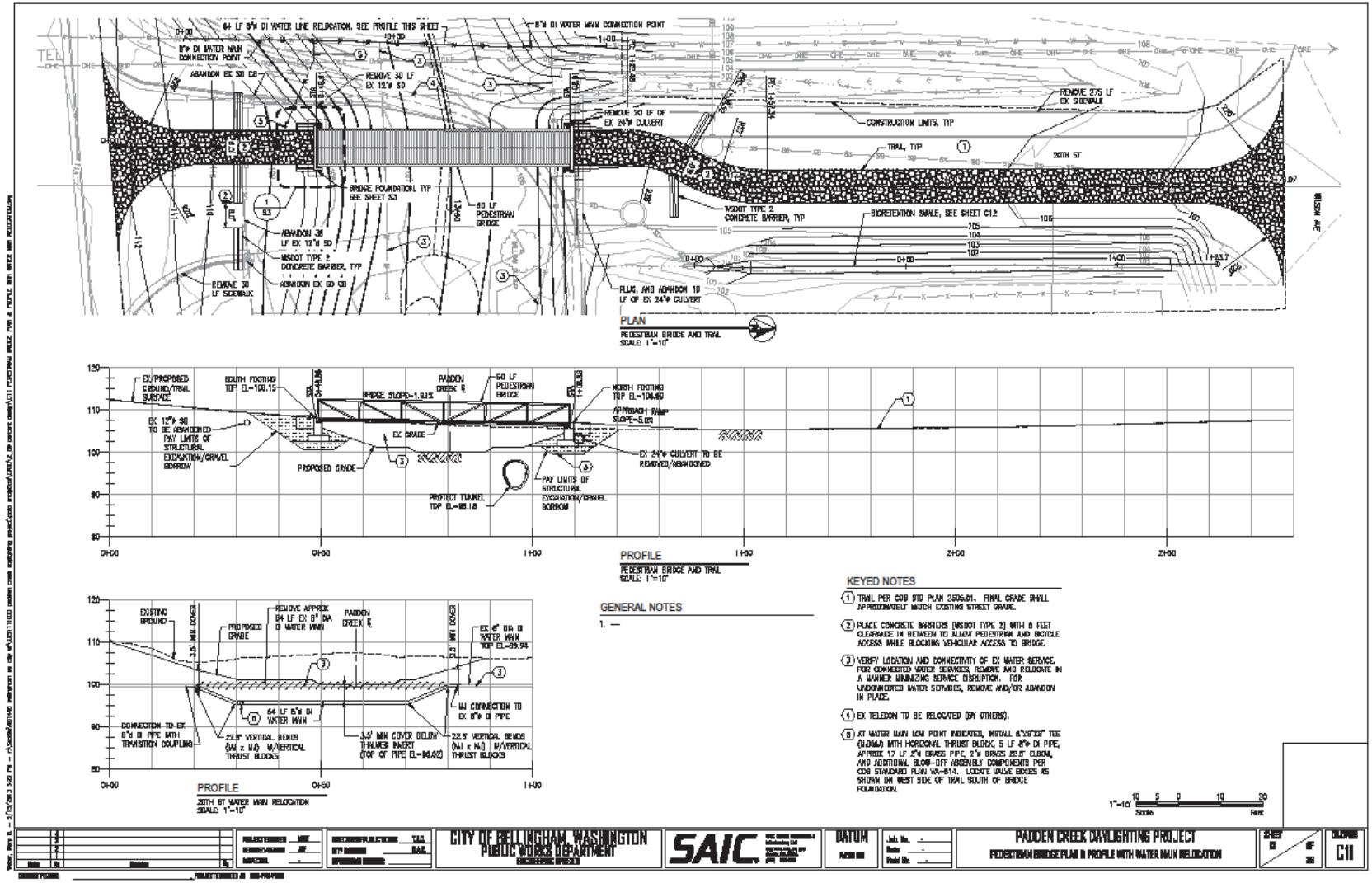

Stabilization/Habitat

Stabilization/Habitat

Next steps

- Necessary property purchases and easements
- Funding opportunities
- Utility relocations
- Consensus of regulatory agencies regarding a final plan
- Permanent vehicle closure of 20th Street

Additional challenges

- Appropriate buffer
- Maintenance
- Public access
- Education component
- Fish habitat design/WDFW
- Check final design for consistency with Happy Valley Neighborhood Plan

Schedule

- WSDOT bridge construction (Start 2013)
- Finalize the creek design (Late 2013)
- All easements in place
- Regulatory permitting
- Secure final funding
- Continue communicating with stakeholders
- Construction in 2015

Stream Walk

What will it look like?

Padden Creek Lagoon

Confluence of Padden and Connelly Creeks

30th and Old Fairhaven Parkway

Lake Padden at Outlet

Questions?

City of Bellingham

Padden Creek Daylighting

Presented by:
Craig Mueller, P.E., Project Engineer
Bill Reilly. Stormwater Manager
(360) 778 – 7922 camueller@cob.org

City of Bellingham

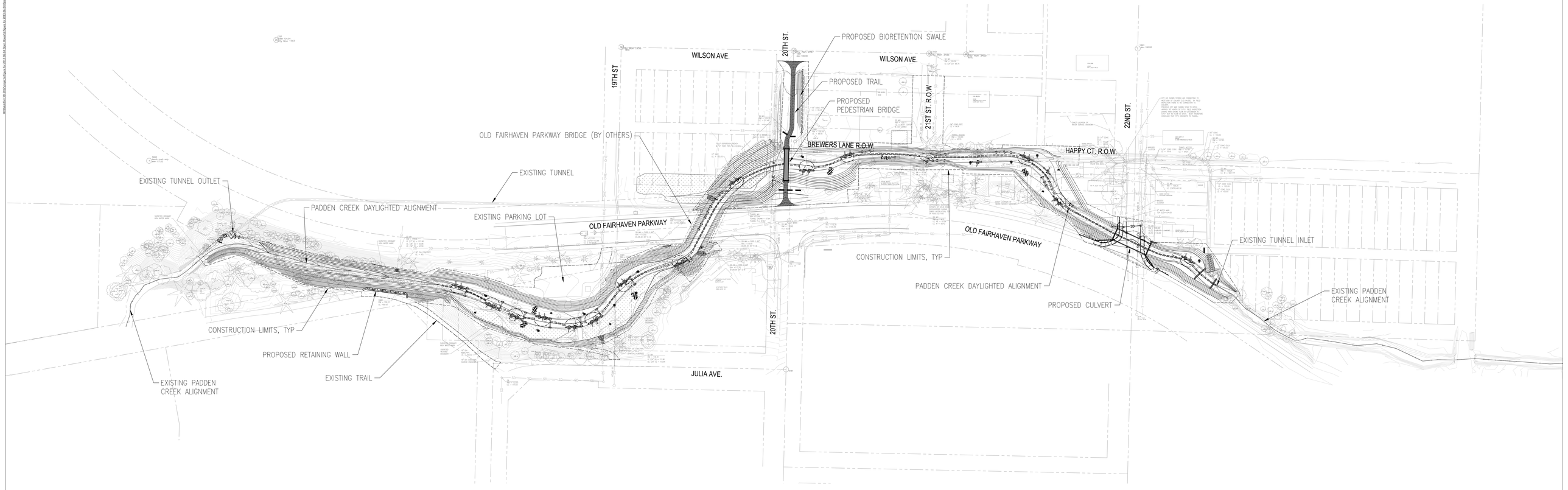

PLAN
SCALE: 1"=40'
1"=40' 40 20 0 40 80
Scale Feet

CITY OF BELLINGHAM, WASHINGTON
PUBLIC WORKS DEPARTMENT
ENGINEERING DIVISION

SAIC.
SAIC Energy, Environment & Infrastructure, LLC
600 Third Ave, Ste 500
Seattle, WA 98104
(206) 866-4700

PADDEN CREEK DAYLIGHTING PROJECT

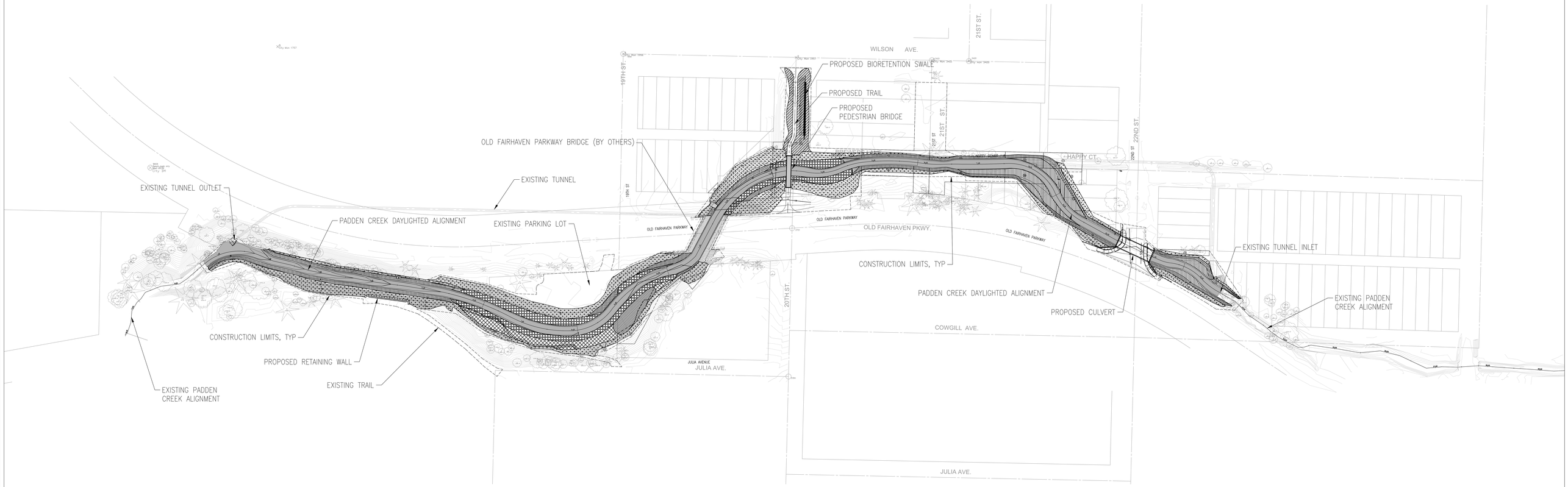

LEGEND:

- EMERGENT WETLAND PLANT COMMUNITY
- LIVE STAKE WETLAND PLANT COMMUNITY
- SHRUB WETLAND PLANT COMMUNITY
- TREE AND SHRUB WETLAND PLANT COMMUNITY
- RIPARIAN BUFFER PLANT COMMUNITY – LIVE STAKES & POLES
- RIPARIAN BUFFER PLANT COMMUNITY – TREES & SHRUBS
- RIPARIAN TRAILSIDE PLANT COMMUNITY
- DAYLIGHTED STREAM CHANNEL
- PROJECT LIMITS

All planting subject to field adjustment and best fit for specific sites. This plan represents guidelines only.

PLAN
SCALE: 1"=40'
40 20 0 40 80
1"=40'
Scale Feet

CITY OF BELLINGHAM, WASHINGTON
PUBLIC WORKS DEPARTMENT
ENGINEERING DIVISION

ANCHOR QEA
1605 Cornwall Ave.
Bellingham, WA 98225
(360) 734-0171
www.anchorqea.com

PADDEN CREEK DAYLIGHTING PROJECT
PLANTING PLAN

PLANT SCHEDULE

Emergent Wetland Plant Community

Common Name	Botanical Name	Size	Spacing	Comments
Carex obnupta	Slough sedge	10 cu-in plug	2' O.C.	
Carex stipata	Sawbeak sedge	10 cu-in plug	2' O.C.	
Juncus effusus	Soft rush	10 cu-in plug	2' O.C.	
Scirpus microcarpus	Small-fruited bulrush	10 cu-in plug	2' O.C.	

Live Stake Wetland Plant Community

Common Name	Botanical Name	Size	Spacing	Comments
Salix scouleriana	Scouler's willow	LS	2' O.C.	
Salix hookeriana	Hooker's willow	LS	2' O.C.	
Cornus sericea	Redtwig dogwood	LS	2' O.C.	

Shrub Wetland Plant Community

Common Name	Botanical Name	Size	Spacing	Comments
Shrubs and Groundcovers				
Althyrium fliix-femina	Lady fern	1 gallon	4' O.C.	
Lonicera involucrata	Black twinberry	1 gallon	4' O.C.	
Physocarpos capitatus	Pacific ninebark	1 gallon	4' O.C.	
Rosa pisocarpa	Wild clustered rose	1 gallon	4' O.C.	
Spiraea douglasii	Douglas spirea	1 gallon	4' O.C.	

Tree and Shrub Wetland Plant Community

Common Name	Botanical Name	Size	Spacing	Comments
Trees				
Alnus rubra	Red alder	1 gallon	12' O.C.	
Crataegus douglasii	Black hawthorne	1 gallon	12' O.C.	
Malus fusca	Pacific crabapple	1 gallon	12' O.C.	
Picea sitchensis	Sitka spruce	1 gallon	12' O.C.	
Thuja plicata	Western red cedar	1 gallon	12' O.C.	Plant in areas with existing shade
Shrubs and Groundcovers				
Cornus sericea	Red twig dogwood	1 gallon	4' O.C.	
Rubus spectabilis	Salmonberry	1 gallon	4' O.C.	

Riparian Buffer Plant Community - Livestakes & Poles

Common Name	Botanical Name	Size	Spacing	Comments
Populus trichocarpa	Black cottonwood	Pole	10' O.C.	Plant between 2' and 3' above OHWM
Salix scouleriana	Scouler's willow	LS	2' O.C.	Plant between 0' and 2' above OHWM
Salix hookeriana	Hooker's willow	LS	2' O.C.	Plant between 0' and 2' above OHWM

Riparian Buffer Plant Community - Trees & Shrubs

Common Name	Botanical Name	Size	Spacing	Comments
Trees				
Abies grandis	Grand fir	2 gallon	12' O.C.	
Acer circinatum	Vine maple	2 gallon	12' O.C.	
Acer macropyllum	Big leaf maple	2 gallon	12' O.C.	
Prunus emarginata	Bitter cherry	2 gallon	12' O.C.	
Pseudotsuga menziesii	Douglas fir	2 gallon	12' O.C.	
Tsuga heterophylla	Western hemlock	2 gallon	12' O.C.	Plant in areas with existing shade
Shrubs and Groundcovers				
Corylus cornuta	Beaked hazelnut	1 gallon	4' O.C.	
Gaultheria shallon	Salal	1 gallon	4' O.C.	
Monhonia aquifolium	Oregon grape	1 gallon	4' O.C.	
Mahonia nervosa	Dwarf Oregon grape	1 gallon	4' O.C.	
Oemleria cerasiformis	Indian plum	1 gallon	4' O.C.	
Polystichum munitum	Swordfern	1 gallon	4' O.C.	
Rosa nutkana	Nootka rose	1 gallon	4' O.C.	
Sambucus racemosa	Red elderberry	1 gallon	4' O.C.	
Symphoricapos albus	Snowberry	1 gallon	4' O.C.	

Riparian Trailside Plant Community

Common Name	Botanical Name	Size	Spacing	Comments
Shrubs and Groundcovers				
Acer circinatum	Vine maple	1 gallon	4' O.C.	
Gaultheria shallon	Salal	1 gallon	4' O.C.	
Philadelphus lewisii	Mock orange	1 gallon	4' O.C.	
Ribes sanguineum	Red-flowering currant	1 gallon	4' O.C.	
Symphoricapos albus	Snowberry	1 gallon	4' O.C.	

CITY OF BELLINGHAM, WASHINGTON
PUBLIC WORKS DEPARTMENT
ENGINEERING DIVISION

ANCHOR QEA
1605 Cornwall Ave
Bellingham, WA 98225
(360) 733-4311
www.anchorqea.com

PADDEN CREEK DAYLIGHTING PROJECT
PLANTING SCHEDULE

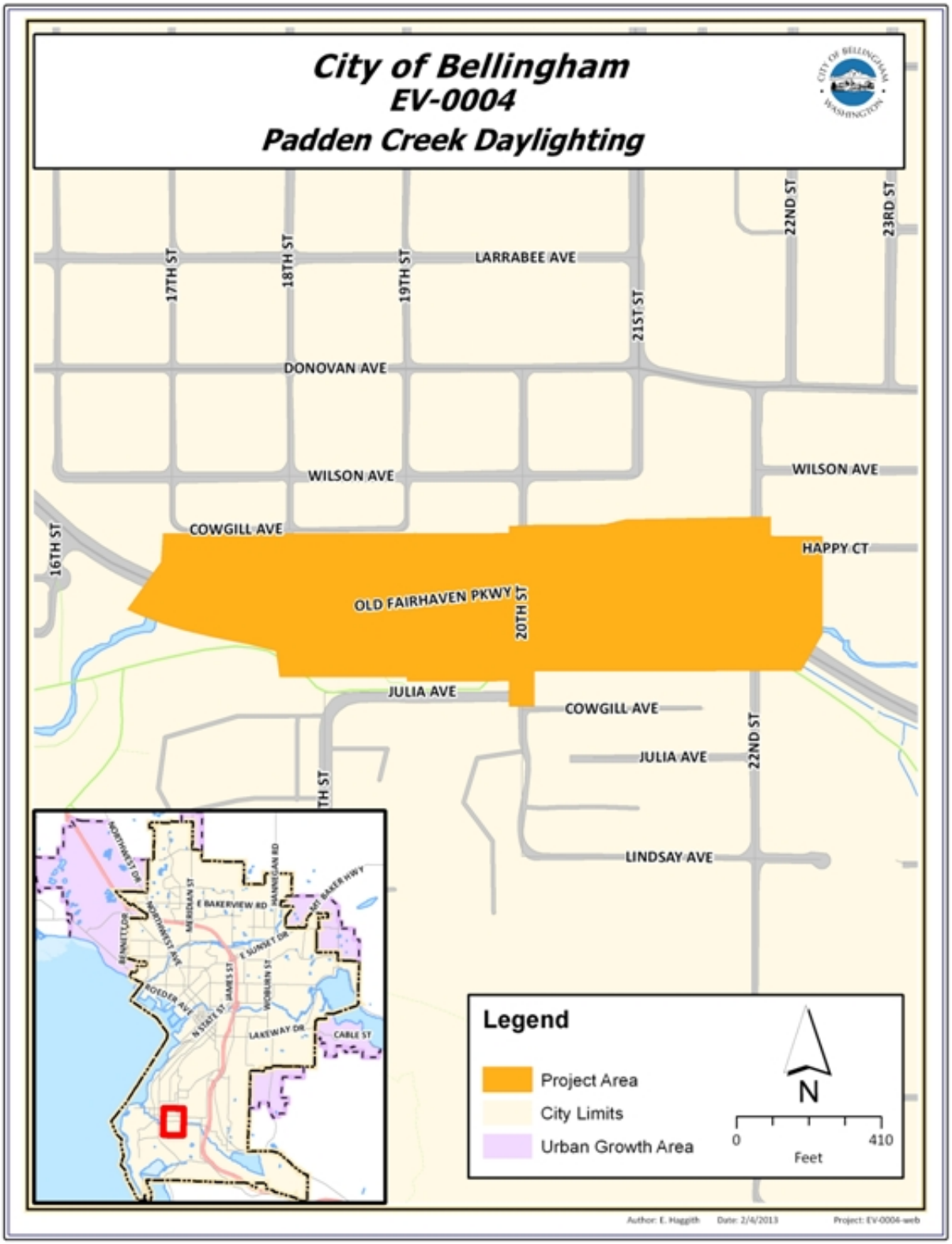
City of Bellingham
EV-0004
Padden Creek Daylighting
17TH ST
18TH ST
19TH ST
LARRABEE AVE
21ST ST
22ND ST
23RD ST
DONOVAN AVE
WILSON AVE
WILSON AVE
16TH ST
COWGILL AVE
HAPPY CT
OLD FAIRHAVEN PKWY
20TH ST
JULIA AVE
COWGILL AVE
22ND ST
JULIA AVE
LINDSAY AVE
Legend
Project Area
City Limits
Urban Growth Area
N
0
410
Feet
Author: E. Haggith
Date: 2/4/2013
Project: EV-0004-web

Interurban Trail
Rotary Trailhead

Interurban Tra
Rotary Trailhe

DEERE

DEERE
200D
LC

DEERE

DEERE

DEERE

STRIDER
EX135
STRIDER
BRIGADE
CONDEN